Caution

1. We strives to produce reliable and high quality products. Our products are intended for specific applications and require proper maintenance and handling. To enhance the performance and service of our products, the devices, machinery or equipment into which they are integrated should undergo preventative maintenance and inspection at regularly scheduled intervals. Failure to properly maintain equipment and machinery incorporating these products can result in catastrophic system failures.

2. To ensure the highest levels of reliability, our products must always be properly handled. The introduction of external contaminants (e.g. dust, oil or cosmetics) can result in failures of products.

3. We offers a variety of products intended for particular applications. It is important that you select the proper component for your intended application. You may contact our Sale's Office if you are uncertain about the products listed in this catalog.

4. Special care is required in designing devices, machinery or equipment which demand high levels of reliability. This is particularly important when designing critical components or systems whose failure can foreseeably result in situations that could adversely affect health or safety. In designing such critical devices, equipment or machinery, careful consideration should be given to, amongst other things, their safety design, fail-safe design, back-up and redundancy systems, and diffusion design.

5. The products listed in the catalog may not be appropriate for use in certain equipment where reliability is critical or where the products may be subjected to extreme conditions. You should consult our sales office before using the products in any of the following types of equipment.
   - -Aerospace Equipment
   - -Equipment Used in the Deep sea
   - -Power Generator Control Equipment (Nuclear, Steam, Hydraulic)
   - -Life Maintenance Medical Equipment
   - -Fire Alarm/Intruder Detector
   - -Vehicle Control Equipment (airplane, railroad, ship, etc.)
   - -Various Safety Equipment

6. Our products have been designed and tested to function within controlled environmental conditions. Do not use products under conditions that deviate from methods or applications specified in this catalog. Failure to employ our products in the proper applications can lead to deterioration, destruction or failure of the products. We shall not be responsible for any bodily injury, fires or accident, property damage or any consequential damages resulting from misuse or misapplication of its products. Products are sold without warranty of any kind, either express or implied, including but not limited to any implied Warranty of merchantability or fitness for a particular purpose.

7. Warning about the handling and disposal of products.
   The following products use which are specified as poisonous chemicals by law. For the prevention of a hazard, do not burn, destroy, or process chemically to make them as gas or powder. When the product is disposed, please follow the related regulation and do not mix this with general industrial waste or household waste.

-Products	Contained materials
-GaAs MMICs	Gallium(Ga) and Arsenic(As)
-Photo Reflectors	Gallium(Ga) and Arsenic(As)
-SAW Filters	Nickel (Ni), Cobalt (C)

8. The product specifications and descriptions listed in this catalog are subject to change at any time, without notice.

NISSHINBO

Nisshinbo Micro Devices Inc.

Official Site
https://www.nisshinbo-microdevices.co.jp/en/

Buy/Sample
https://www.nisshinbo-microdevices.co.jp/en/buy/

Inquiry and order ···

'22-1CAT02E-1(No.1-1-7)TP

NISSHINBO

Electronic Devices For Automotive Selection Guide

2022

Nisshinbo Micro Devices Inc.

Company Profile

About "Nisshinbo Micro Devices Inc."

Integration of New Japan Radio and Ricoh Electronic Devices to Create "Nisshinbo Micro Devices Inc." and Add Momentum in the Analog Semiconductors Business

New Japan Radio Co., Ltd. and Ricoh Electronic Devices Co., Ltd. merged on January 1, 2022 to start a new company, Nisshinbo Microdevices Inc.

Development of the microdevices business of the Nisshinbo Group has been driven mainly by the two subsidiaries, New Japan Radio and Ricoh Electronic Devices. With an eye on recent social developments such as 5G and 6G technologies, the shift to electronic vehicles, the advent of super-smart society, industrial restructuring and an unstable global economy, it was decided to aim for further growth and expansion of the business as an analog solution provider by utilizing resources (in development, sales and production) of both companies in an integrated manner to advance our "Connect Everything" technology and bring about a super-smart society.

The new company "Nisshinbo Micro Devices", in line with the Nisshinbo Group's corporate philosophy of "Change and Challenge! For the creation of the future of Earth and People.", will aim to become a company which provides value and presence expected by customers around the world by providing analog solutions through Electronic Devices and Microwave products drawing on the strength of its analog technology and contributing to development of a connected society.

Integration of Nisshinbo Micro Devices to create two broad product genres

New Japan Radio Co., Ltd.

Microwave business
- Components for satellite communications
- Components for ground communications
- Components for radars
- Sensor modules

Electronic Devices business
- Op-Amps/Comparators
- Power management ICs
- A/V-related amps
- Signal processing ICs
- Sensor elements
- Communications IC
- Others

Ricoh Electronic Devices Co., Ltd.

Electronic Devices business
- Power management ICs
- Li-ion battery protection ICs
- LD drivers
- Real-time clocks
- Mixed Signal
- Others

Electronic Devices business (integrated)

NISSHINBO — Nisshinbo Micro Devices Inc.

Microwave business
- Components for satellite communications
- Components for ground communications
- Components for radars
- Sensor modules

Energy Management (EM)
- Power management ICs
- Li-ion battery protection ICs
- Power device (new business)

Signal Processing (SP)
- Sensor elements
- LD drivers
- Signal processing ICs
- Real-time clocks
- A/V-related amps
- Mixed Signal

・Op-Amps/Comparators
・Communications IC
・Solutions (modules and systems)

[Nisshinbo Holdings Inc.]

The Nisshinbo Group, as an Environment and Energy Company group, will supply solutions to address global environmental problems, which represent the biggest challenge to human society. Utilizing the diverse technologies that we have accumulated so far, we are engaged in wireless and communications, micro devices, automobile brakes, precision instruments, chemicals, textiles and real estate businesses with Mobility, Infrastructure and Safety, and Life and Healthcare as our three strategic business domains. New Japan Radio and Ricoh Electronic Devices play a central role in the microdevice business.

Index

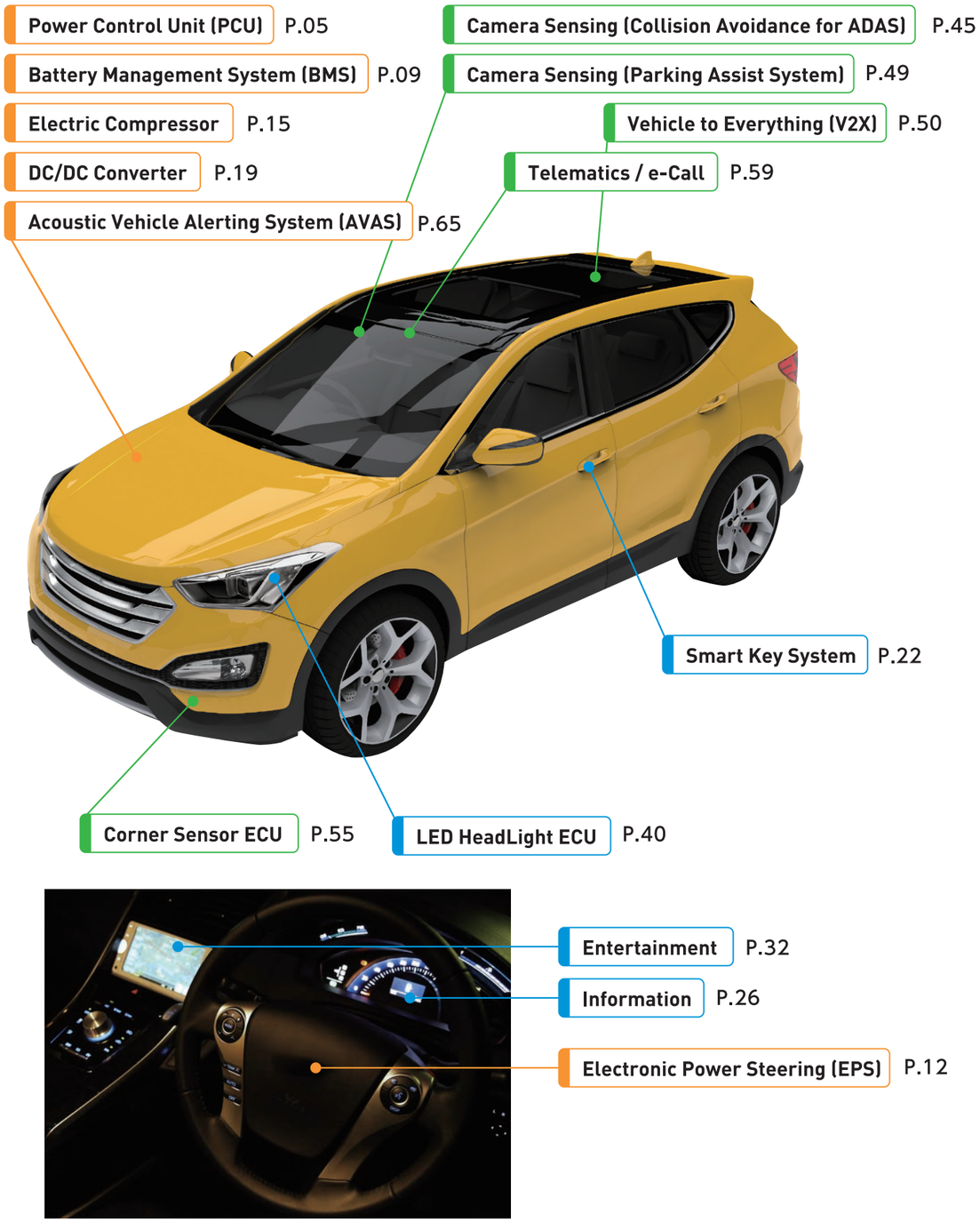

Quality Grade

Nisshinbo Micro Devices Inc. provides four quality grades of products to meet each market and/or customer's quality requirements.
We propose products according to customer's purpose such as the automotive products that classified acceding to purpose/area of automotive applications and the products that meet long term reliability requirement such as 24 hours operated equipment (e.g. factory automation related, social infrastructures and so on).

Principal purpose	Automotive		Industrial equipment and Social infrastructures	General-purpose and Consumer application
	Powertrain and Safety driving related	Chassis, Body control and In-vehicle		
Suffix	Q（Qualified）	P（Peripheral）	D（inDustrial）	S（Standard）
Operation temperature range	-40℃ to +125℃		-40℃ or -50℃ to +125℃	-40℃ to +125℃
			-40℃ or -50℃ to +105℃	-40℃ to +105℃
			-40℃ or -50℃ to +85℃	-40℃ to +85℃
Qualification	AEC-Q100 *1		JEDEC *1 + Operating life stress test 2000h	JEDEC *1
QMS	IATF16949		ISO9001	
Screening	High voltage stress	High voltage stress	High voltage stress	High voltage stress
Test condition	High Temperature Room Temperature Low Temperature	High Temperature Room Temperature	High Temperature Room Temperature	Room Temperature

*1 Please contact us for detailed product information.

List of quality grades of Automotive products of each company before December 2021
Please see each data sheet for details.

		Electronic devices that part number starting with NJx				Electronic devices that part number starting with R					
Suffix		H	Z/Z2	T	A (RF Device)	R8	R	K	J	H	A
Operation Temperature range	-40℃ to +125℃	●	●	● (T1)	●	●	●	●			●
	-40℃ to +110℃					●					
	-40℃ to +105℃			● (T)	●				●		●
	-40℃ to +85℃									●	●
Test condition	High Temperature	●	●	●	●	●	●	●	●	●	●
	Room Temperature	●	●	●	●	●	●	●	●	●	●
	Low Temperature	●	●	●		●	●	●	●	●	
QMS		IATF16949 Correspond to VDA 6.3	IATF16949 *2		IATF16949/ Correspond to VDA 6.3 *2	IATF16949 *2					
AEC-Q100		All products	The AEC mark AEC shows applicable products.		All products	All products	The AEC mark AEC shows applicable products.				

*2 Excluding some outsourced manufacturers

Product Longevity Program

For lifecycle-focused applications 「PRODUCT LONGEVITY PROGRAM」

For long life applications, sudden production end of parts can have a critical impact on the continuity of equipment's production.
It also brings costly steps such as investigation/procurement of alternative parts and redesign of the board due to parts change.
We are operating PLP (Product Longevity Program) to minimize the risk of customers.
PLP maintains the products supply for at least 10 years.
Customers receive one year advanced notice when PLP product finally becomes EOL after 10 years.
PLP prodcut list is updated in January every year by checking each condition of related product line and material supply.
By using products under PLP, customers can make a long-term production plan.

PRODUCT LONGEVITY PROGRAM

●Overview

1. Applicable Products :We announce the Product List for the Program on this page of our website.
   The heart mark, ♡ shows applicable products.
2. Supply Period :We maintain supply of the Applicable Products for ten years from January, 2022.
3. Update :We update the Product List in January every year.
4. EOL :We provide you one year or more advanced notice when Applicable Products become EOL.

Figure of PLP

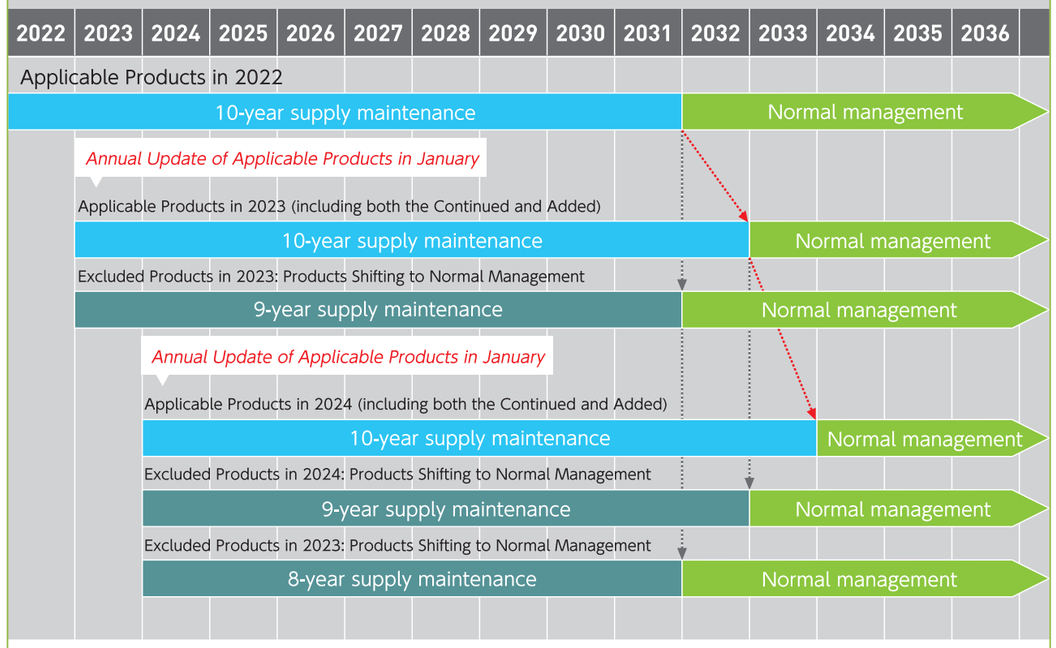

Power Control Unit (PCU)

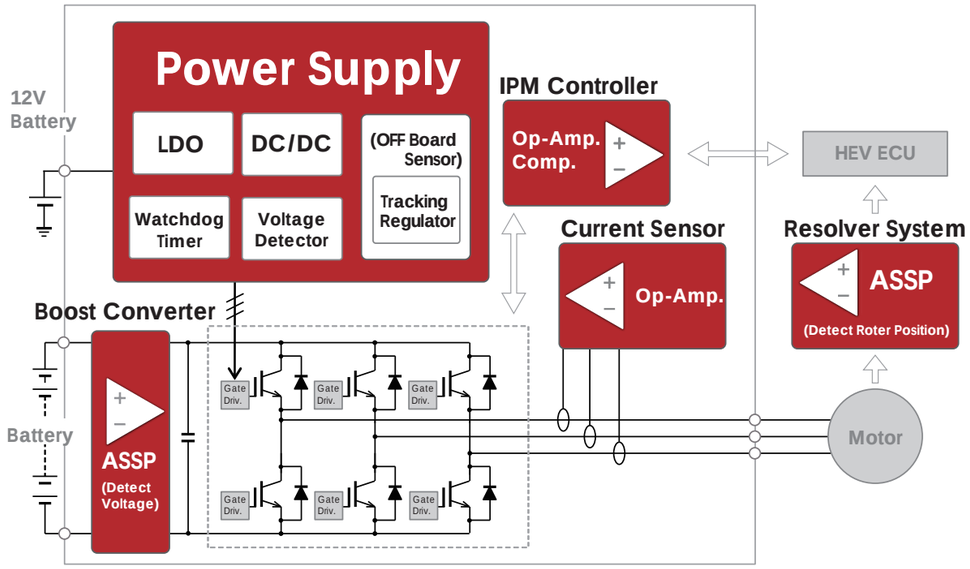

U.D. : Under development NEW : New product AEC : AEC-Q100 Compliant AEC : AEC-Q100 to be Compliant

♡ : Products available in PRODUCT LONGEVITY PROGRAM ♡xxxx : Products available in PRODUCT LONGEVITY PROGRAM with time limit

Operational Amplifier (Op-Amp.)

Part No.	No. of Circuit	Power Supply	Supply Voltage [V]		Characteristics					Operating Temperature Range [℃]		Automotive Quality Class	Package
					V_{IO} [mV]		I_{CC} [mA]		SR[V/μs]				
			min.	max.	typ.	max.	typ.	max.	typ.	min.	max.		
NJM2904B	2	Single	3	36	2	4	0.7	2	0.3	-40	125	Z2	MSOP8(VSP8)
NJM8208 ♡	2	Single	3	35	0.15	1	0.9	1.4	0.2	-40	125	Z	MSOP8(VSP8)
NJM8532 AEC ♡	2	Single	1.8	14	1	5	0.58	0.9	0.4	-40	125	Z	MSOP8(VSP8)
NJU7077 ♡	2	Single	2.2	5.5	0.02	0.4	1.2	1.8	0.5	-40	125	Z	MSOP8(VSP8)

Comparator

Part No.	No. of Circuit	Power Supply	Supply Voltage [V]		Characteristics					Operating Temperature Range [℃]		Automotive Quality Class	Package
					V_{IO} [mV]		I_{CC} [mA]		Propagation Delay [μs]				
			min.	max.	typ.	max.	typ.	max.	typ.	min.	max.		
NJM2903 ♡	2	Single	2	36	2	5	0.4	2	1.5	-40	125	Z2	MSOP8(VSP8)
NJU77242 AEC	2	Single	1.8	5.5	1	7	0.015	0.025	1.25	-40	125	Z2	MSOP8(VSP8)

ASSP

Part No.	key Features	Supply Voltage [V]		Automotive Quality Class	Package	key Features
		min.	max.			
NJU77903 AEC	High Output Current, Rail-to-Rail Input, Output Single CMOS Operational Amplifiers	6.8	36	H	TO-252-5-L3	High output current : ± 100mA typ. (200mApp typ.) Thermal shutdown Current limit
NJU7870 AEC	Transconductance amplifier for resolver excitation	2.4	5.5	Z2	SSOP16-B3	Transconductance : 13.5mAp/Vpp・typ. Thermal shutdown function
NJU7890 AEC	1000V High Voltage Monitor IC	2.2	5.5	Z	PMAP11-PM	Common Mode Input Voltage Rangee : 1000V High Precision Attenuation Rate : ± 1% High Input Resistance : 30M Ω min.

Power Supply

Automatic : Automatic Shift to ECO Mode
Manual : Manual Shift to ECO Mode
Peak : Peak Voltage, Duration time=200ms
Thermal : Thermal Shutdown Circuit
Ripple : Ripple Rejection, Frequency = 1kHz
Discharge : Auto-discharge Function
Reverse : Reverse Current Protection Circuit
Constant : Constant Slope Circuit
High Immunity : Enhanced Noise Immunity
Inrush : Inrush Current Limit Circuit
Diode : Diode Rectification
Soft-Start : Soft-start Circuit
UVLO : Undervoltage Lockout Circuit
OVLO : Overvoltage Lockout Circuit
OVP : Overvoltage Protection Circuit
Phase : Phase Compensation
SSCG : Spectrum Diffusion Type Oscillator
PG : Power Good Function
Sequencing : Start-up Sequencing Control

LDO Regulators

Part No.	Input Voltage Range [V]		Absolute Max. Ratings [V]	Output Current [mA]	Output Voltage Range*1 [V]		Output Voltage inc [%]	Supply Current [μA]	Operating Temp. Range [℃]		Automotive Quality Class	Package	key Features
	min.	max.			min.	max.	Full Temp.	typ.	min.	max.			
R1560 AEC ♡	5.5	60	80	100	1.8	14	± 1.5	3	-40	125	K	HSOP-6J TO-252-5-P2	Peak : 90V Thermal
R1561 AEC ♡	5.5	60	80	100	1.8	14	± 1.5	20	-40	125	K	HSOP-6J TO-252-5-P2	Peak : 90V Thermal
R1525 AEC ♡	3.5	42	50	200	1.8	12	± 1.6	2.2	-40	125	K	SOT-23-5 SOT-89-5 HSOP-6J HSOP-8E	Peak : 60V Thermal High Immunity
R5114 AEC ♡	3.5	42	50	250	3.3 VD: 2.5	5.0 VD: 4.8	± 1.6 VD: ± 1.6	8.5	-40	125	K	HSOP-8E HSOP-18 HQFN0808-28	Timeout WDT Peak : 60V Thermal
R5115 AEC ♡	3.5	42	50	250	3.3 VD: 2.5	5.0 VD: 4.8	± 1.6 VD: ± 1.6	8.5	-40	125	K	HSOP-8E HSOP-18 HQFN0808-28	Window WDT Peak : 60V Thermal
R1526 AEC ♡	3.5	42	50	300	1.8	9	± 1.6	32	-40	125	K	HSOP-8E	Peak : 60V Ripple : 50dB(f=100Hz) Thermal High Immunity
R5117 AEC ♡	3.5	42	50	500	3.3 SVD: 2.5 BVD: 3.5	5.0 SVD: 5.0 BVD: 12.0	-1.25 to 0.75 SVD:-1.25 to 0.75 BVD:-2.0 to 1.0	35	-40	125	K	HSOP-8E HQFN0808-28	Built-in 2ch. VD SVD Released Hysteresis: 0.7% (Max.) BVD Released Hysteresis: 5.0% (Max.) Peak : 60V Thermal
R5116 AEC ♡	3.5	42	50	500	3.3 UV: 2.5 OV: 3.3	5.0 UV: 5.0 OV: 5.5	-1.25 to 0.75 UV: -1.25 to 0.75 OV: -1.25 to 0.75	25	-40	125	K	HSOP-8E HQFN0808-28	Built-in window VD Released Hysteresis: 0.7% (Max.) Peak : 60V Thermal
NJW4182 AEC	4.0	40	45	100	3.3	5.0	± 3.0	9	-40	125	H	SOT-23-5	Ultra-low current consumption Thermal
R1524 AEC ♡	3.5	36	50	200	1.8	12	± 1.6	2.2	-40	125	K	SOT-23-5 SOT-89-5 HSOP-6J HSOP-8E	Peak : 60V Thermal
R1517 AEC ♡	3.5	36	50	500	2.5(Fix) 2.5(Adj)	9(Fix) 20(Adj)	± 1.8(Fix) ± 45mV(Adj)	18	-40	125	K	HSOP-6J TO-252-5-P2	Constant : External Adjustable Ver. E/F Peak : 60V Thermal Discharge : Ver. D/F
R5110 AEC ♡	3.5	36	50	500	1.8 VD: 1.6	5.0 VD: 5.5	± 1.5 VD: ± 1.8	25	-40	125	K	HSOP-8E HSOP-18 HQFN0808-28	Timeout or Window WDT Peak : 60V Thermal Inrush
R1518 AEC ♡	3.5	36	50	1000	2.5(Fix) 2.5(Adj)	9(Fix) 20(Adj)	± 1.8(Fix) ± 45mV(Adj)	18	-40	125	K	HSOP-6J TO-252-5-P2	Constant : External Adjustable Ver. E/F Peak : 60V Thermal Discharge : Ver. D/F
NJM2879 AEC	2.3	6.5	7	200	5.1	5.0	± 2.0	150	-40	125	H	SOT-23-5	Discharge Thermal Reverse
NJM12884 AEC	2.3	6.5	7	500	5.1	5.0	± 2.0	200	-40	125	H	DFN8-WA (ESON8-WA)	Discharge Thermal Soft-Start Reverse

*1 Please refer to the product data sheet for the output voltage lineup.

Power Control Unit (PCU)

Power Supply

Tracking Regulator

Part No.	Operating Voltage Range [V]		Absolute Max. Ratings [V]	Output Current [mA]	Output Voltage Range [V]		Output Voltage Accuracy [mV]	Supply Current [μA]	Operating Temp. Range [℃]		Automotive Quality Class	Package	key Features
	min.	max.			min.	max.	Full Temp.	typ.	min.	max.			
R1540 AEC ♡	3.5	42	50	70	2.2	14	± 15	60	-40	125	K	SOT-23-5 HSOP-8E	Foldback Protection Circuit Ripple : 80dB (f=100Hz) Thermal High Immunity

DC/DC(Buck Converter/SW.REG.)

Part No.	Input Voltage Range [V]		Absolute Max. Ratings [V]	Output Current [mA]	Output Voltage Range [V]		SW. Device	Rectification	SW. Control	Oscillation Frequency [kHz]		Maximum Duty [%]	External Clock Synchronization	Operating Temp. Range [℃]		Automotive Quality Class	Package	key Features
	min.	max.			min.	max.				min.	max.			min.	max.			
NEW R1260 AEC ♡	5.0	60	80	–	1 (Adj)	16 (Adj)	Controller	Synchronous Rectification	Forced PWM, PWM/ VFM	150	600	–	Yes	-40	125	K	HSOP-18	Over Current Protection : Latch-type or Hiccup-type Tracking function Soft-Start : External UVLO Thermal SSCG : Ver. xxxB/D PG Phase : External
NJW4152BA	4.4	40	45	600	0.8	38	Built-in MOS-FET	Diode Rectification	PWM	300	1000	100	–	-40	125	Z	MSOP8 (VSP8)	Pulse-by-pulse current limit circuit Thermal Soft-Start UVLO Phase : External
R1271 AEC ♡ 2030	3.6	30	42	1000	3.3,5.0 (Fix)		Built-in MOS-FET	Synchronous Rectification	Forced PWM	2000 (Fix)		–	–	-40	125	K	DFN3030-12B HSOP-18	Over Current Protection : Latch-type or Hiccup-type Soft-Start : External UVLO OVLO Thermal SSCG : Ver. xx1C/D PG

DC/DC(Boost Converter/SW.REG.)

Part No.	Input Voltage Range [V]		Absolute Max. Ratings [V]	Output Current [A]	Output Voltage Range [V]		SW. Device	SW. Control	Oscillation Frequency [kHz]		Maximum Duty [%]	External Clock Synchronization	Operating Temp. Range [℃]		Automotive Quality Class	Package	key Features
	min.	max.			min.	max.			min.	max.			min.	max.			
NJW4140 AEC ♡	3.0	40	45	–	3.0	–	Controller	PWM	40	1000	85	–	-40	125	Z2	MSOP8 (VSP8)	Available for Fly- Back Pulse-by-pulse current limit circuit Soft-Start UVLO Diode

Voltage Detectors (VD), Watchdog Timers (WDT)

Part No.	Operating Voltage Range [V]		Absolute Max. Ratings [V]	Detector Threshold Range [V]		Detector Threshold Accuracy [%]	Release Delay Time	LDO	WDT	Supply Current [μA]	Operating Temp. Range [℃]		Automotive Quality Class	Package	key Features
	min.	max.		min.	max.	Full Temp.				typ.	min.	max.			
R3160 AEC ♡	2.7	60	80	10	48	± 1.75 *1 ± 1.5 *2	Adjustable	–	–	1.8	-40	125	K	SOT-23-6	*1 Detector Threshold 20V or lower *2 Detector Threshold 20.5V or higher
R5117 AEC ♡	3.5	42	50	BVD:3.5 SVD:2.5	BVD:12 SVD:5.0	BVD:-2 to 1 SVD:-1.25 to 0.75	Adjustable	Yes Io=500mA	–	35	-40	125	K	HSOP-8E HQFN0808-28	Voltage Regulator with Battery Voltage Detector Peak : 60V Thermal
R3152 AEC ♡	3	42	50	OV:1.1 UV:1.0	OV:5.9 UV:4.8	-1.25 to 0.75	Adjustable	–	–	1.5	-40	125	K	SOT-23-6	Window Voltage Detector SENSE Pin Detection Type

Part No.	Operating Voltage Range [V]		Absolute Max. Ratings [V]	Detector Threshold Range [V]		Detector Threshold Accuracy [%]	Release Delay Time	LDO	WDT	Supply Current [μA]	Operating Temp. Range [℃]		Automotive Quality Class	Package	key Features
	min.	max.		min.	max.	Full Temp.				typ.	min.	max.			
R5116 AEC ♡	3.5	42	50	OV:3.3 UV:2.5	OV:5.5 UV:5.0	-1.25 to 0.75	Adjustable	Yes Io=500mA	–	25	-40	125	K	HSOP-8E HQFN0808-28	Voltage Regulator with Window Voltage Detector Peak : 60V Thermal
R5114 AEC ♡	3.5	42	50	2.5	4.8	± 1.6	Adjustable	Yes Io=250mA	Yes	8.5	-40	125	K	HSOP-8E HSOP-18 HQFN0808-28	Timeout WDT Peak : 60V Thermal
R5115 AEC ♡	3.5	42	50	2.5	4.8	± 1.6	Adjustable	Yes Io=250mA	Yes	8.5	-40	125	K	HSOP-8E HSOP-18 HQFN0808-28	Window WDT Peak : 60V Thermal
R3154 AEC ♡	3	42	50	OV:0.75 UV:0.55	OV:3.7 UV:3.3	-1.25 to 0.75	Adjustable	–	–	2	-40	125	R	SOT-23-6	Applicable to failure diagnosis Window Voltage Detector SENSE Pin Detection Type
R3119xxxxA AEC ♡	1.2	36	50	2.3	12	-3 to 2	–	–	–	3.3	-40	105	J	SOT-23-5	
R3121xxxxA AEC ♡	1.4	36	50	3	12	-2.2 to 2.5	–	–	–	3.8	-40	125	K	SOT-23-6	
R5110 AEC ♡	3.5	36	50	1.6	5.5	± 1.8	Adjustable	Yes Io=500mA	Yes	25	-40	125	K	HSOP-8E HSOP-18 HQFN0808-28	Timeout or Window WDT Peak : 60V Thermal Inrush
R3119xxxxE AEC ♡	2.1	6	7	2.3	12	-3 to 2	–	–	–	3.3	-40	105	J	SOT-23-5	SENSE Pin Detection Type
R3121xxxxE AEC ♡	2.4	6	7	3	12	-2.2 to 2.5	–	–	–	3.5	-40	125	K	SOT-23-6	SENSE Pin Detection Type

Power Control Unit (PCU)
Battery Management System (BMS)
Electronic Power Steering(EPS)
Electric Compressor
DC/DC Converter
Smart Key System
Information
Entertainment
LED Headlight ECU
Camera Sensing (Collision Avoidance ADAS)
Camera Sensing (Parking Assist System)
Vehicle to Everything (V2X)
Corner Sensor ECU
Telematics/ e-Call
Acoustic Vehicle Alerting System (AVAS)

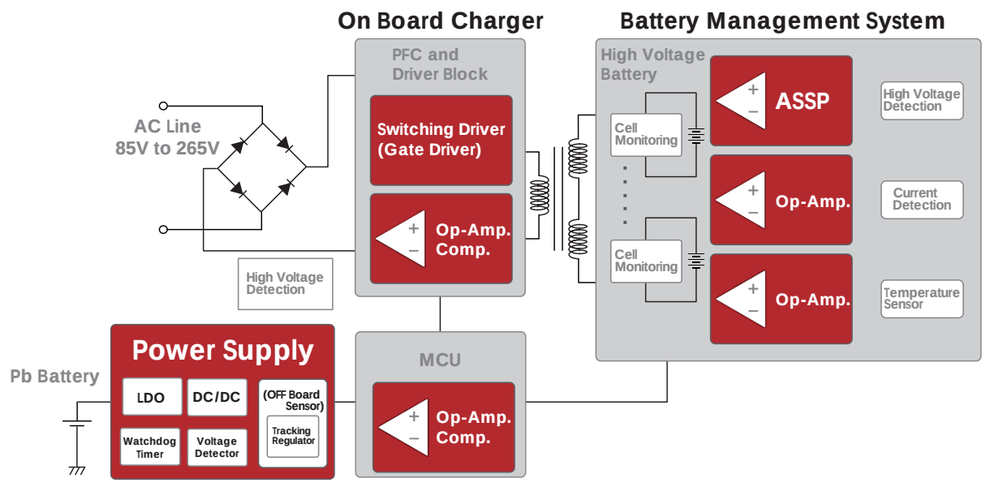

U.D. : Under development NEW : New product AEC : AEC-Q100 Compliant AEC : AEC-Q100 to be Compliant

♡ : Products available in PRODUCT LONGEVITY PROGRAM ♡xxxx : Products available in PRODUCT LONGEVITY PROGRAM with time limit

Operational Amplifier (Op-Amp.)

Part No.	No. of Circuit	Power Supply	Supply Voltage [V]		Characteristics					Operating Temp. Range [℃]		Automotive Quality Class	Package
					V_{IO} [mV]		I_{CC} [mA]		SR[V/μs]				
			min.	max.	typ.	max.	typ.	max.	typ.	min.	max.		
NJM2904B	2	Single	3	36	2	4	0.7	2	0.3	-40	125	Z2	MSOP8(VSP8)
NJM8208 ♡	2	Single	3	35	0.15	1	0.9	1.4	0.2	-40	125	Z	MSOP8(VSP8)
NJM8532 AEC ♡	2	Single	1.8	14	1	5	0.58	0.9	0.4	-40	125	Z	MSOP8(VSP8)
NJU7077 ♡	2	Single	2.2	5.5	0.02	0.4	1.2	1.8	0.5	-40	125	Z	MSOP8(VSP8)

Comparator

Part No.	No. of Circuit	Power Supply	Supply Voltage [V]		Characteristics					Operating Temp. Range [℃]		Automotive Quality Class	Package
					V_{IO} [mV]		I_{CC} [mA]		Propagation Delay [μs]				
			min.	max.	typ.	max.	typ.	max.	typ.	min.	max.		
NJM2903 ♡	2	Single	2	36	2	5	0.4	2	1.5	-40	125	Z2	MSOP8(VSP8)
NJU77242 AEC	2	Single	1.8	5.5	1	7	0.015	0.025	1.25	-40	125	Z2	MSOP8(VSP8)

ASSP

Part No.	key Features	Supply Voltage [V]		Automotive Quality Class	Package	key Features
		min.	max.			
NJU7890 AEC	1000V High Voltage Monitor IC	2.2	5.5	Z	PMAP11-PM	Common Mode Input Voltage Rangee : 1000V High Precision Attenuation Rate : ± 1% High Input Resistance : 30M Ω min.

Power Supply

Automatic : Automatic Shift to ECO Mode
Manual : Manual Shift to ECO Mode
Peak : Peak Voltage, Duration time=200ms
Thermal : Thermal Shutdown Circuit
Ripple : Ripple Rejection, Frequency = 1kHz
Discharge : Auto-discharge Function
Reverse : Reverse Current Protection Circuit
Constant : Constant Slope Circuit
High Immunity : Enhanced Noise Immunity
Inrush : Inrush Current Limit Circuit
Diode : Diode Rectification
Soft-Start : Soft-start Circuit
UVLO : Undervoltage Lockout Circuit
OVLO : Overvoltage Lockout Circuit
OVP : Overvoltage Protection Circuit
Phase : Phase Compensation
SSCG : Spectrum Diffusion Type Oscillator
PG : Power Good Function
Sequencing : Start-up Sequencing Control

LDO Regulators

Part No.	Input Voltage Range [V]		Absolute Max. Ratings [V]	Output Current [mA]	Output Voltage Range*1 [V]		Output Voltage Accuracy [%]	Supply Current [μA]	Operating Temp. Range [℃]		Automotive Quality Class	Package	key Features
	min.	max.			min.	max.	Full Temp.	typ.	min.	max.			
R1560 AEC ♡	5.5	60	80	100	1.8	14	± 1.5	3	Yes	125	K	HSOP-6J TO-252-5-P2	Peak : 90V Thermal
R1561 AEC ♡	5.5	60	80	100	1.8	14	± 1.5	20	Yes	125	K	HSOP-6J TO-252-5-P2	Peak : 90V Thermal
R1525 AEC ♡	3.5	42	50	200	1.8	12	± 1.6	2.2	Yes	125	K	SOT-23-5 SOT-89-5 HSOP-6J HSOP-8E	Peak : 60V Thermal High Immunity
R5114 AEC ♡	3.5	42	50	250	3.3 VD: 2.5	5.0 VD: 4.8	± 1.6 VD: ± 1.6	8.5	-40	125	K	HSOP-8E HSOP-18 HQFN0808-28	Timeout WDT Peak : 60V Thermal
R5115 AEC ♡	3.5	42	50	250	3.3 VD: 2.5	5.0 VD: 4.8	± 1.6 VD: ± 1.6	8.5	-40	125	K	HSOP-8E HSOP-18 HQFN0808-28	Window WDT Peak : 60V Thermal
R1526 AEC ♡	3.5	42	50	300	1.8	9	± 1.6	32	Yes	125	K	HSOP-8E	Peak : 60V Ripple : 50dB(f=100Hz) Thermal High Immunity
R5117 AEC ♡	3.5	42	50	500	3.3 SVD: 2.5 BVD: 3.5	5.0 SVD: 5.0 BVD: 12.0	-1.25 to 0.75 SVD:-1.25 to 0.75 BVD:-2.0 to 1.0	35	-40	125	K	HSOP-8E HQFN0808-28	Built-in Dual VD SVD Released Hysteresis: 0.7% (Max.) BVD Released Hysteresis: 5.0% (Max.) Peak : 60V Thermal
R5116 AEC ♡	3.5	42	50	500	3.3 UV: 2.5 OV: 3.3	5.0 UV: 5.0 OV: 5.5	-1.25 to 0.75 UV: -1.25 to 0.75 OV: -1.25 to 0.75	25	-40	125	K	HSOP-8E HQFN0808-28	Built-in Window VD Released Hysteresis: 0.7% (Max.) Peak : 60V Thermal
NJW4182 AEC	4.0	40	45	100	3.3	5.0	± 3.0	9	-	125	H	SOT-23-5	Ultra-low current consumption Thermal
R1524 AEC ♡	3.5	36	50	200	1.8	12	± 1.6	2.2	Yes	125	K	SOT-23-5 SOT-89-5 HSOP-6J HSOP-8E	Peak : 60V Thermal
R1517 AEC ♡	3.5	36	50	500	2.5(Fix) 2.5(Adj)	9(Fix) 20(Adj)	± 1.8(Fix) ± 45mV(Adj)	18	Yes	125	K	HSOP-6J TO-252-5-P2	Constant : External Adjustable Ver. E/F Peak : 60V Thermal Discharge : Ver. D/F
R1518 AEC ♡	3.5	36	50	1000	2.5(Fix) 2.5(Adj)	9(Fix) 20(Adj)	± 1.8(Fix) ± 45mV(Adj)	18	Yes	125	K	HSOP-6J TO-252-5-P2	Constant : External Adjustable Ver. E/F Peak : 60V Thermal Discharge : Ver. D/F
RP170 AEC ♡	2.6	10	12	300	1.2	6	± 3.0	23	Yes	125	K	SOT-23-5 SOT-89-5	Ripple : 70dB Thermal Constant Discharge : Ver. D
NJM2879 AEC	2.3	6.5	7	200	5.1	5.0	± 2.0	150	Yes	125	H	SOT-23-5	Discharge Thermal Reverse
NJM12884 AEC	2.3	6.5	7	500	5.1	5.0	± 2.0	200	Yes	125	H	DFN8-WA (ESON8-WA)	Discharge Thermal Soft-Start Reverse

*1 Please refer to the product data sheet for the output voltage lineup.

Power Supply

Tracking Regulator

Part No.	Operating Voltage Range [V] min.	Operating Voltage Range [V] max.	Absolute Max. Ratings [V]	Output Current [mA]	Output Voltage Range [V] min.	Output Voltage Range [V] max.	Output Voltage Accuracy[mV] Full Temp.	Supply Current [μA] typ.	Operating Temp. Range [℃] min.	Operating Temp. Range [℃] max.	Automotive Quality Class	Package	key Features
R1540 AEC ♡	3.5	42	50	70	2.2	14	± 15	60	-40	125	K	SOT-23-5 HSOP-8E	Foldback Protection Circuit Ripple : 80dB (f=100Hz) Thermal High Immunity

DC/DC(Buck Converter/SW.REG.)

Part No.	Input Voltage Range [V] min.	Input Voltage Range [V] max.	Absolute Max. Ratings [V]	Output Current [mA]	Output Voltage Range [V] min.	Output Voltage Range [V] max.	SW. Device	Rectification	SW. Control	Oscillation Frequency [kHz] min.	Oscillation Frequency [kHz] max.	Maximum Duty [%]	External Clock Synchronization	Operating Temp. Range [℃] min.	Operating Temp. Range [℃] max.	Automotive Quality Class	Package	key Features
NEW R1260 AEC ♡	5.0	60	80	–	1 (Adj)	16 (Adj)	Controller	Synchronous Rectification	Forced PWM, PWM/VFM	150	600	–	Yes	-40	125	K	HSOP-18	Over Current Protection : Latch-type or Hiccup-type Tracking function Soft-Start : External Adjustable UVLO OVLO Thermal SSCG : Ver. xxxB/D PG Phase : External
NJW4152BA	4.4	40	45	600	0.8	38	Built-in MOS-FET	Diode Rectification	PWM	300	1000	100	–	-40	125	Z	MSOP8 (VSP8)	Pulse-by-pulse current limit circuit Thermal Soft-Start UVLO Phase : External
R1271 AEC ♡ 2030	3.6	30	42	1000	3.3,5.0 (Fix)		Built-in MOS-FET	Synchronous Rectification	Forced PWM	2000 (Fix)		–	–	-40	125	K	DFN3030-12B HSOP-18	Over Current Protection : Latch-type or Hiccup-type Soft-Start : External Adjustable UVLO OVLO Thermal SSCG : Ver. xx1C/D PG
R1245 AEC ♡	4.5	30	32	1200	0.8 (Adj)	27.3 (Adj)	Built-in MOS-FET	Diode Rectification	PWM	A/B:330 (Fix) C/D:500 (Fix) E/F:1000 (Fix) G/H:2400 (Fix)		–	–	-40	105	J	HSOP-8E DFN2020-8	Over Current Protection : Latch-type or Hiccup-type Soft-Start UVLO Thermal

DC/DC(Boost Converter/SW.REG.)

Part No.	Input Voltage Range [V] min.	Input Voltage Range [V] max.	Absolute Max. Ratings [V]	Output Current[A]	Output Voltage Range [V] min.	Output Voltage Range [V] max.	SW. Device	SW. Control	Oscillation Frequency [kHz] min.	Oscillation Frequency [kHz] max.	Maximum Duty [%]	External Clock Synchronization	Operating Temp. Range [℃] min.	Operating Temp. Range [℃] max.	Automotive Quality Class	Package	key Features
NJW4140 AEC ♡	3.0	40	45	–	3.0	–	Controller	PWM	40	1000	85	–	-40	125	Z2	MSOP8 (VSP8)	Available for Fly-Back Pulse-by-pulse current limit circuit Soft-Start UVLO Diode

Voltage Detectors (VD), Watchdog Timers (WDT)

Part No.	Operating Voltage Range [V] min.	Operating Voltage Range [V] max.	Absolute Max. Ratings [V]	Detector Threshold Range*1 [V] min.	Detector Threshold Range*1 [V] max.	Detector Threshold Accuracy[%] Full Temp.	Release Delay Time	LDO	WDT	Supply Current [μA] typ.	Operating Temp. Range [℃] min.	Operating Temp. Range [℃] max.	Automotive Quality Class	Package	key Features
R3160 AEC ♡	2.7	60	80	10	48	± 1.75 *1 ± 1.5 *2	Adjustable	–	–	1.8	-40	125	K	SOT-23-6	*1 Detector Threshold 20V or lower *2 Detector Threshold 20.5V or higher
R5117 AEC ♡	3.5	42	50	BVD:3.5 SVD:2.5	BVD:12 SVD:5.0	BVD:-2 to 1 SVD:-1.25 to 0.75	Adjustable	Yes Io=500mA	–	35	-40	125	K	HSOP-8E HQFN0808-28	Voltage Regulator with Battery Voltage Detector Peak : 60V Thermal
R3152 AEC ♡	3.0	42	50	OV:1.1 UV:1.0	OV:5.9 UV:4.8	-1.25 to 0.75	Adjustable	–	–	1.5	-40	125	K	SOT-23-6	Window Voltage Detector SENSE Pin Detection Type
R5116 AEC ♡	3.5	42	50	OV:3.3 UV:2.5	OV:5.5 UV:5.0	-1.25 to 0.75	Adjustable	Yes Io=500mA	–	25	-40	125	K	HSOP-8E HQFN0808-28	Voltage Regulator with Window Voltage Detector Peak : 60V Thermal
R5114 AEC ♡	3.5	42	50	2.5	4.8	± 1.6	Adjustable	Yes Io=250mA	Yes	8.5	-40	125	K	HSOP-8E HSOP-18 HQFN0808-28	Timeout WDT Peak : 60V Thermal
R5115 AEC ♡	3.5	42	50	2.5	4.8	± 1.6	Adjustable	Yes Io=250mA	Yes	8.5	-40	125	K	HSOP-8E HSOP-18 HQFN0808-28	Window WDT Peak : 60V Thermal
R3154 AEC ♡	3.0	42	50	OV:0.75 UV:0.55	OV:3.7 UV:3.3	-1.25 to 0.75	Adjustable	–	–	2	-40	125	R	SOT-23-6	Applicable to failure diagnosis Window Voltage Detector SENSE Pin Detection Type
U.D. NV3601 AEC	2.4(VDD) 0(SENSE)	6(VDD) 36(SENSE)	7(VDD) 42(SENSE)	OV:4.5 UV:3.3	OV:22.2 UV:19.8	-1.25 to 0.75		–	–	TBD	-40	125	Q	SOT-23-5-DC	Window Voltage Detector
U.D. NV3600 AEC	2.4(VDD) 0(SENSE)	6(VDD) 36(SENSE)	7(VDD) 42(SENSE)	3.3	19.8	-1.25 to 0.75		–	–	TBD	-40	125	Q	SOT-23-5-DC	-VDET & +VDET Individually set voltage, +VDET setting range:4.5V to 22.2V
R3118 AEC ♡	1	6	7	0.6	5	± 2.5	Adjustable	–	–	0.4	-40	125	K	SOT-23-6	SENSE Pin Detection Type

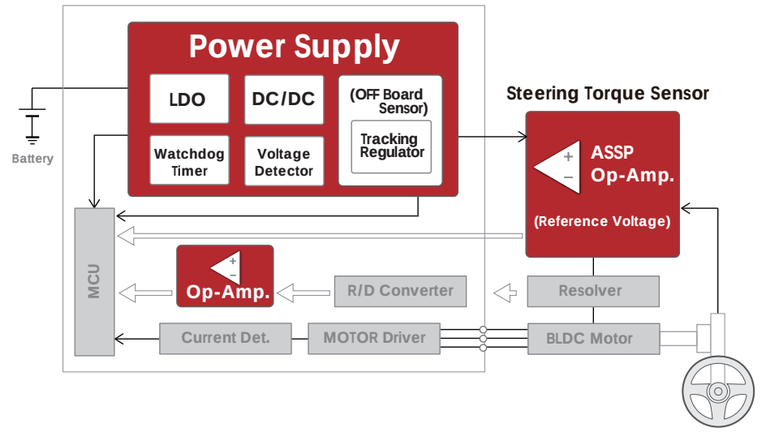

U.D. : Under development NEW : New product AEC : AEC-Q100 Compliant AEC : AEC-Q100 to be Compliant

♡ : Products available in PRODUCT LONGEVITY PROGRAM ♡xxxx : Products available in PRODUCT LONGEVITY PROGRAM with time limit

Operational Amplifier (Op-Amp.)

Part No.	No. of Circuit	Power Supply	Supply Voltage [V] min.	Supply Voltage [V] max.	Characteristics V_{IO} [mV] typ.	V_{IO} [mV] max.	I_{CC} [mA] typ.	I_{CC} [mA] max.	SR[V/μs] typ.	Operating Temp. Range [℃] min.	Operating Temp. Range [℃] max.	Automotive Quality Class	Package
NJM2904B	2	Single	3	36	2	4	0.7	2	0.3	-40	125	Z2	MSOP8(VSP8)
NJM8532 AEC ♡	2	Single	1.8	14	1	5	0.58	0.9	0.4	-40	125	Z	MSOP8(VSP8)

ASSP

Part No.	key Features	Supply Voltage [V] min.	Supply Voltage [V] max.	Automotive Quality Class	Package	key Features
NJU77903	High Output Current, Rail-to-Rail Input, Output Single CMOS Operational Amplifiers	6.8	36	H	TO-252-5-L3	High output current : ± 100mA typ. (200mApp typ.) Thermal shutdown Current limit
NJU7870	Transconductance amplifier for resolver excitation	2.4	5.5	Z2	SSOP16-B3	Transconductance : 13.5mAp/Vpp・typ. Thermal shutdown function

Power Supply

Automatic : Automatic Shift to ECO Mode
Manual : Manual Shift to ECO Mode
Peak : Peak Voltage, Duration time=200ms
Thermal : Thermal Shutdown Circuit
Ripple : Ripple Rejection, Frequency = 1kHz
Discharge : Auto-discharge Function
Reverse : Reverse Current Protection Circuit
Constant : Constant Slope Circuit
High Immunity : Enhanced Noise Immunity
Inrush : Inrush Current Limit Circuit
Diode : Diode Rectification
Soft-Start : Soft-start Circuit
UVLO : Undervoltage Lockout Circuit
OVLO : Overvoltage Lockout Circuit
OVP : Overvoltage Protection Circuit
Phase : Phase Compensation
SSCG : Spectrum Diffusion Type Oscillator
PG : Power Good Function
Sequencing : Start-up Sequencing Control

LDO Regulators

Part No.	Input Voltage Range [V] min.	Input Voltage Range [V] max.	Absolute Max. Ratings [V]	Output Current [mA] max.	Output Voltage Range*1 [V] min.	Output Voltage Range*1 [V] max.	Output Voltage Accuracy [%] Full Temp.	Supply Current [μA] typ.	Operating Temp. Range [℃] min.	Operating Temp. Range [℃] max.	Automotive Quality Class	Package	key Features
R1560 AEC ♡	5.5	60	80	100	1.8	14	± 1.5	3	-40	125	K	HSOP-6J TO-252-5-P2	Peak : 90V Thermal
R1561 AEC ♡	5.5	60	80	100	1.8	14	± 1.5	20	-40	125	K	HSOP-6J TO-252-5-P2	Peak : 90V Thermal
R1525 AEC ♡	3.5	42	50	200	1.8	12	± 1.6	2.2	-40	125	K	SOT-23-5 SOT-89-5 HSOP-6J HSOP-8E	Peak : 60V Thermal High Immunity

*1 Please refer to the product data sheet for the output voltage lineup.

Power Supply

LDO Regulators

Part No.	Input Voltage Range [V] min.	Input Voltage Range [V] max.	Absolute Max. Ratings [V]	Output Current [mA] max.	Output Voltage Range*1 [V] min.	Output Voltage Range*1 [V] max.	Output Voltage Accuracy [%] Full Temp.	Supply Current [μA] typ.	Operating Temp. Range [℃] min.	Operating Temp. Range [℃] max.	Automotive Quality Class	Package	key Features
R5114 AEC ♡	3.5	42	50	250	3.3 VD: 2.5	5.0 VD: 4.8	± 1.6 VD: ± 1.6	8.5	-40	125	K	HSOP-8E HSOP-18 HQFN0808-28	Timeout WDT Peak : 60V Thermal
R5115 AEC ♡	3.5	42	50	250	3.3 VD: 2.5	5.0 VD: 4.8	± 1.6 VD: ± 1.6	8.5	-40	125	K	HSOP-8E HSOP-18 HQFN0808-28	Window WDT Peak : 60V Thermal
R1526 AEC ♡	3.5	42	50	300	1.8	9	± 1.6	32	-40	125	K	HSOP-8E	Peak : 60V Ripple : 50dB(f=100Hz) Thermal High Immunity
R5116 AEC ♡	3.5	42	50	500	3.3 UV: 2.5 OV: 3.3	5.0 UV: 5.0 OV: 5.5	-1.25 to 0.75 UV: -1.25 to 0.75 OV: -1.25 to 0.75	25	-40	125	K	HSOP-8E HQFN0808-28	Built-in Window VD Released Hysteresis: 0.7% (Max.) Peak : 60V Thermal
R5117 AEC ♡	3.5	42	50	500	3.3 SVD: 2.5 BVD: 3.5	5.0 SVD: 5.0 BVD: 12.0	-1.25 to 0.75 SVD:-1.25 to 0.75 BVD:-2.0 to 1.0	35	-40	125	K	HSOP-8E HQFN0808-28	Built-in Dual VD SVD Released Hysteresis: 0.7% (Max.) BVD Released Hysteresis: 5.0% (Max.) Peak : 60V Thermal
NJW4182 AEC	4.0	40	45	100	3.3	5.0	± 3.0	9	-40	125	H	SOT-23-5	Ultra-low current consumption Thermal
R1524 AEC ♡	3.5	36	50	200	1.8	12	± 1.6	2.2	-40	125	K	SOT-23-5 SOT-89-5 HSOP-6J HSOP-8E	Peak : 60V Thermal
R5111 AEC ♡	3.5	36	50	300	1.8 VD: 1.6	5.0 VD: 5.5	± 1.5 VD: ± 1.8	25	-40	125	K	HSOP-8E HSOP-18 HQFN0808-28	Timeout or Window WDT Peak : 60V Thermal Inrush
R1517 AEC ♡	3.5	36	50	500	2.5(Fix) 2.5(Adj)	9(Fix) 20(Adj)	± 1.8(Fix) ± 45mV(Adj)	18	-40	125	K	HSOP-6J TO-252-5-P2	Constant : External Adjustable Ver. E/F Peak : 60V Thermal Discharge : Ver. D/F
R5110 AEC ♡	3.5	36	50	500	1.8 VD: 1.6	5.0 VD: 5.5	± 1.5 VD: ± 1.8	25	-40	125	K	HSOP-8E HSOP-18 HQFN0808-28	Timeout or Window WDT Peak : 60V Thermal Inrush
R1518 AEC ♡	3.5	36	50	1000	2.5(Fix) 2.5(Adj)	9(Fix) 20(Adj)	± 1.8(Fix) ± 45mV(Adj)	18	-40	125	K	HSOP-6J TO-252-5-P2	Constant : External Adjustable Ver. E/F Peak : 60V Thermal Discharge : Ver. D/F
NJM2879 AEC	2.3	6.5	7	200	5.1	5.0	± 2.0	150	-40	125	H	SOT-23-5	Discharge Thermal Reverse
NJM12884 AEC	2.3	6.5	7	500	5.1	5.0	± 2.0	200	-40	125	H	DFN8-WA (ESON8-WA)	Discharge Thermal Soft-Start Reverse

*1 Please refer to the product data sheet for the output voltage lineup.

Tracking Regulator

Part No.	Operating Voltage Range [V] min.	Operating Voltage Range [V] max.	Absolute Max. Ratings [V]	Output Current [mA] max.	Output Voltage Range [V] min.	Output Voltage Range [V] max.	Output Voltage Accuracy [mV] Full Temp.	Supply Current [μA] typ.	Operating Temp. Range [℃] min.	Operating Temp. Range [℃] max.	Automotive Quality Class	Package	key Features
R1540 AEC ♡	3.5	42	50	70	2.2	14	± 15	60	-40	125	K	SOT-23-5 HSOP-8E	Foldback Protection Circuit Ripple : 80dB (f=100Hz) Thermal High Immunity

DC/DC(Buck Converter/SW.REG.)

Part No.	Input Voltage Range [V] min.	Input Voltage Range [V] max.	Absolute Max. Ratings [V]	Output Current [mA] max.	Output Voltage Range [V] min.	Output Voltage Range [V] max.	SW. Device	Rectification	SW. Control	Oscillation Frequency [kHz] min.	Oscillation Frequency [kHz] max.	Maximum Duty [%]	External Clock Synchronization	Operating Temp. Range [℃] min.	Operating Temp. Range [℃] max.	Automotive Quality Class	Package	key Features
NEW R1260 AEC ♡	5.0	60	80	–	1 (Adj)	16 (Adj)	Controller	Synchronous Rectification	Forced PWM, PWM/VFM	150	600	–	Yes	-40	125	K	HSOP-18	Over Current Protection : Latch-type or Hiccup-type Tracking function Soft-Start : External Adjustable UVLO OVLO Thermal PG SSCG : Ver. xxxB/D Phase : External
NJW4152BA	4.4	40	45	600	0.8	38	Built-in MOSFET	Diode Rectification	PWM	300	1000	100	–	-40	125	Z	MSOP8 (VSP8)	Pulse-by-pulse current limit circuit Thermal Soft-Start UVLO Phase : External
R1271 AEC ♡ 2030	3.6	30	42	1000	3.3,5.0 (Fix)		Built-in MOSFET	Synchronous Rectification	Forced PWM	2000 (Fix)		–	–	-40	125	K	DFN3030-12B HSOP-18	Over Current Protection : Latch-type or Hiccup-type Soft-Start : External Adjustable UVLO Thermal SSCG : Ver. xx1C/D PG

DC/DC(Boost Converter/SW.REG.)

Part No.	Input Voltage Range [V] min.	Input Voltage Range [V] max.	Absolute Max. Ratings [V]	Output Current [A] max.	Output Voltage Range [V] min.	Output Voltage Range [V] max.	SW. Device	SW. Control	Oscillation Frequency [kHz] min.	Oscillation Frequency [kHz] max.	Maximum Duty [%]	External Clock Synchronization	Operating Temp. Range [℃] min.	Operating Temp. Range [℃] max.	Automotive Quality Class	Package	key Features
NJW4140 AEC ♡	3.0	40	45	–	3.0	–	Controller	PWM	40	1000	85	–	-40	125	Z2	MSOP8 (VSP8)	Available for Fly-Back AEC=Z2 Pulse-by-pulse current limit circuit Soft-Start UVLO Diode

Voltage Detectors (VD), Watchdog Timers (WDT)

Part No.	Operating Voltage Range [V] min.	Operating Voltage Range [V] max.	Absolute Max. Ratings [V]	Detector Threshold Range [V] min.	Detector Threshold Range [V] max.	Detector Threshold Accuracy [%] Full Temp.	Release Delay Time	LDO	WDT	Supply Current [μA] typ.	Operating Temp. Range [℃] min.	Operating Temp. Range [℃] max.	Automotive Quality Class	Package	key Features
R3160 AEC ♡	2.7	60	80	10	48	± 1.75 *1 ± 1.5 *2	Adjustable	–	–	1.8	-40	125	K	SOT-23-6	*1 Detector Threshold 20V or lower *2 Detector Threshold 20.5V or higher
R5117 AEC ♡	3.5	42	50	BVD:3.5 SVD:2.5	BVD:12 SVD:5.0	BVD:-2 to 1 SVD:-1.25 to 0.75	Adjustable	Yes Io= 500mA	–	35	-40	125	K	HSOP-8E HQFN0808-28	Voltage Regulator with Battery Voltage Detector Peak : 60V Thermal
R3152 AEC ♡	3.0	42	50	OV:1.1 UV:1.0	OV:5.9 UV:4.8	-1.25 to 0.75	Adjustable	–	–	1.5	-40	125	K	SOT-23-6	Window Voltage Detector SENSE Pin Detection
R5116 AEC ♡	3.5	42	50	OV:3.3 UV:2.5	OV:5.5 UV:5.0	-1.25 to 0.75	Adjustable	Yes Io= 500mA	–	25	-40	125	K	HSOP-8E HQFN0808-28	Voltage Regulator with Window Voltage Detector Peak : 60V Thermal
R5114 AEC ♡	3.5	42	50	2.5	4.8	± 1.6	Adjustable	Yes Io= 250mA	Yes	8.5	-40	125	K	HSOP-8E HSOP-18 HQFN0808-28	Timeout WDT Peak : 60V Thermal
R5115 AEC ♡	3.5	42	50	2.5	4.8	± 1.6	Adjustable	Yes Io= 250mA	Yes	8.5	-40	125	K	HSOP-8E HSOP-18 HQFN0808-28	Window WDT Peak : 60V Thermal
R3154 AEC ♡	3.0	42	50	OV:0.75 UV:0.55	OV:3.7 UV:3.3	-1.25 to 0.75	Adjustable	–	–	2	-40	125	R	SOT-23-6	Applicable to failure diagnosis Window Voltage Detector SENSE Pin Detection Type
R3121xxxxA AEC ♡	1.4	36	50	3	12	-2.2 to 2.5	Adjustable	–	–	3.8	-40	125	K	SOT-23-6	VDD pin detection
R5110 AEC ♡	3.5	36	50	1.6	5.5	± 1.8	Adjustable	Yes Io= 500mA	Yes	25	-40	125	K	HSOP-8E HSOP-18 HQFN0808-28	Timeout or Window WDT Peak : 60V Thermal Inrush
R5111 AEC ♡	3.5	36	50	1.6	5.5	± 1.8	Adjustable	Yes Io= 300mA	Yes	25	-40	125	K	HSOP-8E HSOP-18 HQFN0808-28	Timeout or Window WDT Peak : 60V Thermal Inrush
R3121xxxxE AEC ♡	2.4	6	7	3	12	-2.2 to 2.5	Adjustable	–	–	3.5	-40	125	K	SOT-23-6	SENSE Pin Detection Type

Power Control Unit (PCU) | Battery Management System (BMS) | Electronic Power Steering(EPS) | Electric Compressor | DC/DC Converter | Smart Key System | Information | Entertainment | LED Headlight ECU | Camera Sensing (Collision Avoidance/ADAS) | Camera Sensing (Parking Assist System) | Vehicle to Everything (V2X) | Corner Sensor ECU | Telematics/ e-Call | Acoustic Vehicle Alerting System (AVAS)

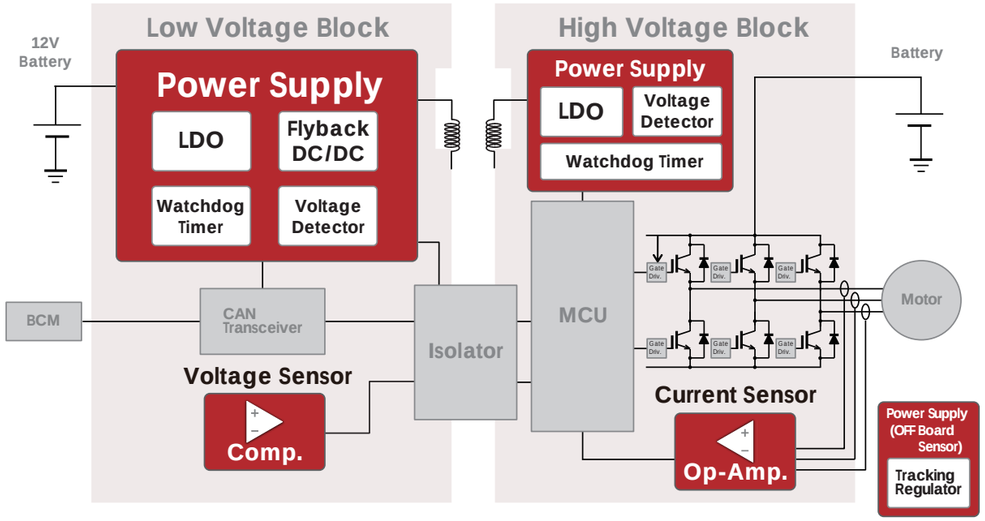

U.D. : Under development NEW : New product AEC : AEC-Q100 Compliant AEC : AEC-Q100 to be Compliant

♡ : Products available in PRODUCT LONGEVITY PROGRAM ♡ xxxx : Products available in PRODUCT LONGEVITY PROGRAM with time limit

Operational Amplifier (Op-Amp.)

Part No.	No. of Circuit	Power Supply	Supply Voltage [V]		Characteristics					Operating Temp. Range [℃]		Automotive Quality Class	Package
					VIO [mV]		ICC [mA]		SR[V/μs]				
			min.	max.	typ.	max.	typ.	max.	typ.	min.	max.		
NJM2904B AEC	2	Single	3	36	2	4	0.7	2	0.3	-40	125	T1	MSOP8(VSP8)
NJM8532	2	Single	1.8	14	1	5	0.58	0.9	0.4	-40	125	T1	MSOP8(VSP8)
NJU7046 ♡	1	Single	2.7	5.5	0.9	5	1.4	2.2	9	-40	125	T1	SOT-23-5
NJU7047 ♡	2	Single	2.7	5.5	0.9	5	2.7	4.5	9	-40	125	T1	MSOP8(TVSP8)
NJU77552 AEC	2	Single	2.2	5.5	1	6.5	0.1	0.122	0.8	-40	125	T1	MSOP8(VSP8)

Comparator

Part No.	No. of Circuit	Power Supply	Supply Voltage [V]		Characteristics					Operating Temp. Range [℃]		Automotive Quality Class	Package
					VIO [mV]		ICC [mA]		Propagation Delay [μs]				
			min.	max.	typ.	max.	typ.	max.	typ.	min.	max.		
NJM2903 ♡	2	Single	2	36	2	5	0.4	2	1.5	-40	125	T1	MSOP8(VSP8)
NJU77242 ♡	2	Single	1.8	5.5	1	7	0.015	0.025	1.25	-40	125	T1	MSOP8(VSP8)

Power Supply

- Automatic : Automatic Shift to ECO Mode
- Manual : Manual Shift to ECO Mode
- Peak : Peak Voltage, Duration time=200ms
- Thermal : Thermal Shutdown Circuit
- Ripple : Ripple Rejection, Frequency = 1kHz
- Discharge : Auto-discharge Function
- Reverse : Reverse Current Protection Circuit
- Constant : Constant Slope Circuit
- High Immunity : Enhanced Noise Immunity
- Inrush : Inrush Current Limit Circuit
- Diode : Diode Rectification
- Soft-Start : Soft-start Circuit
- UVLO : Undervoltage Lockout Circuit
- OVLO : Overvoltage Lockout Circuit
- OVP : Overvoltage Protection Circuit
- Phase : Phase Compensation
- SSCG : Spectrum Diffusion Type Oscillator
- PG : Power Good Function
- Sequencing : Start-up Sequencing Control

LDO Regulators

Part No.	Input Voltage Range [V]		Absolute Max. Ratings [V]	Output Current [mA]	Output Voltage Range*1 [V]		Output Voltage Accuracy [%]	Supply Current [μA]	Operating Temp. Range [℃]		Automotive Quality Class	Package	key Features
	min.	max.			min.	max.	Full Temp.	typ.	min.	max.			
R1560 AEC ♡	5.5	60	80	100	1.8	14	± 1.5	3	-40	125	K	HSOP-6J TO-252-5-P2	Peak : 90V Thermal

Part No.	Input Voltage Range [V]		Absolute Max. Ratings [V]	Output Current [mA]	Output Voltage Range*1 [V]		Output Voltage Accuracy [%]	Supply Current [μA]	Operating Temp. Range [℃]		Automotive Quality Class	Package	key Features
	min.	max.			min.	max.	Full Temp.	typ.	min.	max.			
R1561 AEC ♡	5.5	60	80	100	1.8	14	± 1.5	20	-40	125	K	HSOP-6J TO-252-5-P2	Peak : 90V Thermal
R1525 AEC ♡	3.5	42	50	200	1.8	12	± 1.6	2.2	-40	125	K	SOT-23-5 SOT-89-5 HSOP-6J HSOP-8E	Peak : 60V Thermal High Immunity
R5112 AEC ♡	3.5	42	50	200	1.8 VD B: 1.6 D: 2.9	5.0 VD B: 4.8 D: 4.8	± 1.6 VD: ± 1.6	3.8	-40	125	K	HSOP-8E	+VD(Voltage Detector) Peak : 60V Thermal
R5114 AEC ♡	3.5	42	50	250	3.3 VD: 2.5	5.0 VD: 4.8	± 1.6 VD: ± 1.6	8.5	-40	125	K	HSOP-8E HSOP-18 HQFN0808-28	Timeout WDT Peak : 60V Thermal
R5115 AEC ♡	3.5	42	50	250	3.3 VD: 2.5	5.0 VD: 4.8	± 1.6 VD: ± 1.6	8.5	-40	125	K	HSOP-8E HSOP-18 HQFN0808-28	Window WDT Peak : 60V Thermal
R1526 AEC ♡	3.5	42	50	300	1.8	9	± 1.6	32	-40	125	K	HSOP-8E	Peak : 60V Ripple : 50dB(f=100Hz) Thermal High Immunity
R5116 AEC ♡	3.5	42	50	500	3.3 UV: 2.5 OV: 3.3	5.0 UV: 5.0 OV: 5.5	-1.25 to 0.75 UV: -1.25 to 0.75 OV: -1.25 to 0.75	25	-40	125	K	HSOP-8E HQFN0808-28	Built-in Window VD Released Hysteresis: 0.7% (Max.) Peak : 60V Thermal
R5117 AEC ♡	3.5	42	50	500	3.3 SVD: 2.5 BVD: 3.5	5.0 SVD: 5.0 BVD:12.0	-1.25 to 0.75 SVD:-1.25 to 0.75 BVD:-2.0 to 1.0	35	-40	125	K	HSOP-8E HQFN0808-28	Built-in Dual VD SVD Released Hysteresis: 0.7% (Max.) BVD Released Hysteresis: 5.0% (Max.) Peak : 60V Thermal
NJW4104 AEC	4.0	40	45	200	3.3	5.0	± 2.0	A ver.:5.5 B ver.:5.0	-40	125	T1	SOT-89-5-2 SOT-89-3	Ultra-low current consumption UVLO Thermal
NJW4107 AEC ♡	4.0	40	45	300	3.3	5.0	± 1.5	A ver.:75 B ver.:70	-40	125	T1	SOT-89-5-2 SOT-89-3	Fast Transient Response UVLO Thermal
NJW4105 AEC	4.0	40	45	500	3.3	8.0	± 1.5	65	-40	125	T1	TO-252-5-L5	Fast Transient Response Output voltage accuracy includes regulation Thermal
NJW4106 AEC	4.0	40	45	500	2.5	16	VADJ ± 2.0	65	-40	125	T1	TO-252-5-L5	Fast Transient Response Adjustable Type Output voltage accuracy includes regulation Thermal
U.D. NP4271 AEC	4.0	40	45	500	3.3	5.0	± 2.0	120	-40	125	P	HSOP-8-AC	with WDT + window RESET
R1524 AEC ♡	3.5	36	50	200	1.8	12	± 1.6	2.2	-40	125	K	SOT-23-5 SOT-89-5 HSOP-6J HSOP-8E	Peak : 60V Thermal
R5111 AEC ♡	3.5	36	50	300	1.8 VD: 1.6	5.0 VD: 5.5	± 1.5 VD: ± 1.8	25	-40	125	K	HSOP-8E HSOP-18 HQFN0808-28	Timeout or Window WDT Peak : 60V Thermal Inrush
R1517 AEC ♡	3.5	36	50	500	2.5(Fix) 2.5(Adj)	9(Fix) 20(Adj)	± 1.8(Fix) ± 45mV(Adj)	18	-40	125	K	HSOP-6J TO-252-5-P2	Constant : External Adjustable Ver. E/F Peak : 60V Thermal Discharge : Ver. D/F
R1518 AEC ♡	3.5	36	50	1000	2.5(Fix) 2.5(Adj)	9(Fix) 20(Adj)	± 1.8(Fix) ± 45mV(Adj)	18	-40	125	K	HSOP-6J TO-252-5-P2	Constant : External Adjustable Ver. E/F Peak : 60V Thermal Discharge : Ver. D/F
U.D. NJM11100 AEC	2.1	18	20	240	1.3	17	Vref ± 2.5	200	-40	125	T1	SOT-23-6-1	Ripple : 75dB(f=1kHz) Adjustable Type With Noise Bypass Pin Thermal Reverse
RP170 AEC ♡	2.6	10	12	300	1.2	6	± 3.0	23	-40	125	K	SOT-23-5 SOT-89-5	Ripple : 70dB Thermal Constant Discharge : Ver. D
NJM2879 AEC	2.3	6.5	7	200	5.1	5.0	± 2.0	150	-40	125	H	SOT-23-5	Discharge Thermal Reverse
NJM12884 AEC	2.3	6.5	7	500	5.1	5.0	± 2.0	200	-40	125	H	DFN8-WA (ESON8-WA)	Discharge Thermal Soft-Start Reverse

*1 Please refer to the product data sheet for the output voltage lineup.

Power Supply

Tracking Regulators

Part No.	Operating Voltage Range [V] min.	Operating Voltage Range [V] max.	Absolute Max. Ratings [V]	Output Current [mA]	Output Voltage Range [V] min.	Output Voltage Range [V] max.	Output Voltage Accuracy [mV] Full Temp.	Supply Current [μA] typ.	Operating Temp. Range [℃] min.	Operating Temp. Range [℃] max.	Automotive Quality Class	Package	key Features
R1540 AEC ♡	3.5	42	50	70	2.2	14	± 15	60	-40	125	K	SOT-23-5 HSOP-8E	Foldback Protection Circuit Ripple : 80dB (f=100Hz) Thermal High Immunity
U.D. NR4250 AEC	4	40	45	50	2.5	36	± 10	40	-40	125	P	SOT-23-5-DC	Overcurrent Protection Ripple : 80dB (f=100Hz) Thermal High Immunity
U.D. NR4254 AEC	4	40	45	70	2.5	36	± 5	40	-40	125	P	SOT-89-5-DF	Output Voltage Accuracy: at VADJ/EN=5V Overcurrent Protection Ripple : 80dB (f=100Hz) Thermal High Immunity
U.D. NR4252 AEC	4	40	45	250	1.5	36	± 10	45	-40	125	P	SOT-89-5-DF	Overcurrent Protection Ripple : 80dB (f=100Hz) Thermal High Immunity

DC/DC(Buck Converter/SW.REG.)

Part No.	Input Voltage Range [V] min.	Input Voltage Range [V] max.	Absolute Max. Ratings [V]	Output Current [mA]	Output Voltage Range [V] min.	Output Voltage Range [V] max.	SW. Device	Rectification	SW. Control	Oscillation Frequency [kHz] min.	Oscillation Frequency [kHz] max.	Maximum Duty [%]	External Clock Synchronization	Operating Temp. Range [℃] min.	Operating Temp. Range [℃] max.	Automotive Quality Class	Package	key Features
NEW R1260 AEC ♡	5.0	60	80	–	1 (Adj)	16 (Adj)	Controller	Synchronous Rectification	Forced PWM, PWM/VFM	150	600	–	Yes	-40	125	K	HSOP-18	Over Current Protection : Latch-type or Hiccup-type Tracking function Soft-Start : External UVLO OVLO Thermal SSCG : Ver. xxxB/D PG Phase : External
R1271 AEC ♡ 2030	3.6	30	42	1000	3.3,5.0 (Fix)		Built-in MOS-FET	Synchronous Rectification	Forced PWM	2000 (Fix)		–	–	-40	125	K	DFN3030-12B HSOP-18	Over Current Protection : Latch-type or Hiccup-type Soft-Start : External UVLO OVLO Thermal SSCG : Ver. xx1C/D PG
R1278 AEC ♡ 2030	3.6	30	36	2000	3.3 (Adj)	5.0 (Adj)	Built-in MOS-FET	Synchronous Rectification	Forced PWM	1800	2200	–	Yes	-40	125	K	HSOP-18	Over Current Protection : Hiccup-type Tracking function Soft-Start : External UVLO OVLO Thermal SSCG : Ver. 003C PG Phase : External
R1276 AEC ♡ 2030	3.6	30	36	3000	0.7 (Adj)	6.5 (Adj)	Built-in MOS-FET	Synchronous Rectification	Forced PWM, PWM/VFM	250	1000	–	Yes	-40	125	K	HSOP-18	Over Current Protection : Hiccup-type Tracking function Soft-Start : External UVLO OVLO Thermal SSCG : Ver. 00xC PG Phase : External

DC/DC(Boost Converter/SW.REG.)

Part No.	Input Voltage Range [V] min.	Input Voltage Range [V] max.	Absolute Max. Ratings [V]	Output Current [A]	Output Voltage Range [V] min.	Output Voltage Range [V] max.	SW. Device	SW. Control	Oscillation Frequency [kHz] min.	Oscillation Frequency [kHz] max.	Maximum Duty [%]	External Clock Synchronization	Operating Temp. Range [℃] min.	Operating Temp. Range [℃] max.	Automotive Quality Class	Package	key Features
NJW4132 ♡	4.55	40	45	1.75	4.55	38	Built-in MOS-FET	PWM	2000 (Fix)		80	Yes	-40	125	T1	SOT-89-5-2	PWM, External Clock Synchronization Over Current Protection (Hiccup type) Thermal Soft-Start UVLO Phase

Part No.	Input Voltage Range [V] min.	Input Voltage Range [V] max.	Absolute Max. Ratings [V]	Output Current [A]	Output Voltage Range [V] min.	Output Voltage Range [V] max.	SW. Device	SW. Control	Oscillation Frequency [kHz] min.	Oscillation Frequency [kHz] max.	Maximum Duty [%]	External Clock Synchronization	Operating Temp. Range [℃] min.	Operating Temp. Range [℃] max.	Automotive Quality Class	Package	key Features
NJW4133 AEC	3.0	40	45	5.0	3.0	38	Built-in MOS-FET	PWM	100	2400	92	Yes	-40	125	T1	HSOP8-M1	Over Current Protection (Hiccup type) Thermal Soft-Start OVP UVLO
NJW4140 ♡	3.0	40	45	–	3.0	–	Controller	PWM	40	1000	85	–	-40	125	T1	MSOP8 (VSP8)	Available for Fly-Back AEC=Z2 Pulse-by-pulse current limit circuit Soft-Start UVLO
NJW1871 AEC ♡	2.5	40	45	–	2.5	–	Controller	PWM	50	1000	87	Yes	-40	125	T1	MSOP10 (VSP10)	5.2V Gate Drive Available for Fly-Back RUN function Over Current Protection (Hiccup type) Thermal Soft-Start UVLO OVP
NJW4142 AEC ♡	2.5	40	45	–	2.5	–	Controller	PWM	50	1000	87	Yes	-40	125	T1	MSOP10 (VSP10)	10V Gate Drive Available for Fly-Back RUN function Over Current Protection (Hiccup type) Thermal Soft-Start UVLO OVP
U.D. NJW1871A AEC	4.5 (TBD)	40	45	–	4.5 (TBD)	–	Controller	PWM	1000	2000 (TBD)	(TBD)	Yes	-40	125	T1	MSOP10 (VSP10)	5.2V Gate Drive Available for Fly-Back RUN function Over Current Protection (Hiccup type) Thermal Soft-Start UVLO OVP

Voltage Detectors (VD), Watchdog Timers (WDT)

Part No.	Operating Voltage Range [V] min.	Operating Voltage Range [V] max.	Absolute Max. Ratings [V]	Detector Threshold Range [V] min.	Detector Threshold Range [V] max.	Detector Threshold Accuracy [%] Full Temp.	Release Delay Time	LDO	WDT	Supply Current [μA] typ.	Operating Temp. Range [℃] min.	Operating Temp. Range [℃] max.	Automotive Quality Class	Package	key Features
R3160 AEC ♡	2.7	60	80	10	48	± 1.75 *1 ± 1.5 *2	Adjustable	–	–	1.8	-40	125	K	SOT-23-6	*1 Detector Threshold 20V or lower *2 Detector Threshold 20.5V or higher
R5117 AEC ♡	3.5	42	50	BVD:3.5 SVD:2.5	BVD:12 SVD:5.0	BVD:-2 to 1 SVD:-1.25 to 0.75	Adjustable	Yes Io=500mA	–	35	-40	125	K	HSOP-8E HQFN0808-28	Voltage Regulator with Battery Voltage Detector Peak : 60V Thermal
R3152 AEC ♡	3.0	42	50	OV:1.1 UV:1.0	OV:5.9 UV:4.8	-1.25 to 0.75	Adjustable	–	–	1.5	-40	125	K	SOT-23-6	Window Voltage Detector SENSE Pin Detection Type
R5116 AEC ♡	3.5	42	50	OV:3.3 UV:2.5	OV:5.5 UV:5.0	-1.25 to 0.75	Adjustable	Yes Io=500mA	–	25	-40	125	K	HSOP-8E HQFN0808-28	Voltage Regulator with Window Voltage Detector Peak : 60V Thermal
R5112 AEC ♡	3.5	42	50	B:1.6 D:2.9	B:4.8 D:4.8	± 1.6	Adjustable	Yes Io=200mA	–	3.8	-40	125	K	HSOP-8E	Voltage Regulator with VD Peak : 60V Thermal
R5114 AEC ♡	3.5	42	50	2.5	4.8	± 1.6	Adjustable	Yes Io=250mA	Yes	8.5	-40	125	K	HSOP-8E HSOP-18 HQFN0808-28	Timeout WDT Peak : 60V Thermal
R5115 AEC ♡	3.5	42	50	2.5	4.8	± 1.6	Adjustable	Yes Io=250mA	Yes	8.5	-40	125	K	HSOP-8E HSOP-18 HQFN0808-28	Window WDT Peak : 60V Thermal
R3154 AEC ♡	3.0	42	50	OV:0.75 UV:0.55	OV:3.7 UV:3.3	-1.25 to 0.75	Adjustable	–	–	2	-40	125	R	SOT-23-6	Applicable to failure diagnosis Window Voltage Detector SENSE Pin Detection Type
U.D. NP4271 AEC	4.0	40	45	4.6 4.1	5.6	Low: ± 2.0 High: ± 5.0	Adjustable	Yes Io=500mA	Yes	120	-40	125	P	HSOP-8-AC	Window Voltage Detector
R5111 AEC ♡	3.5	36	50	1.6	5.5	± 1.8	Adjustable	Yes Io=300mA	Yes	25	-40	125	K	HSOP-8E HSOP-18 HQFN0808-28	Timeout or Window WDT Peak : 60V Thermal Inrush
R3118 AEC ♡	1	6	7	0.6	5	± 2.5	Adjustable	–	–	0.4	-40	125	K	SOT-23-6	SENSE Pin Detection Type

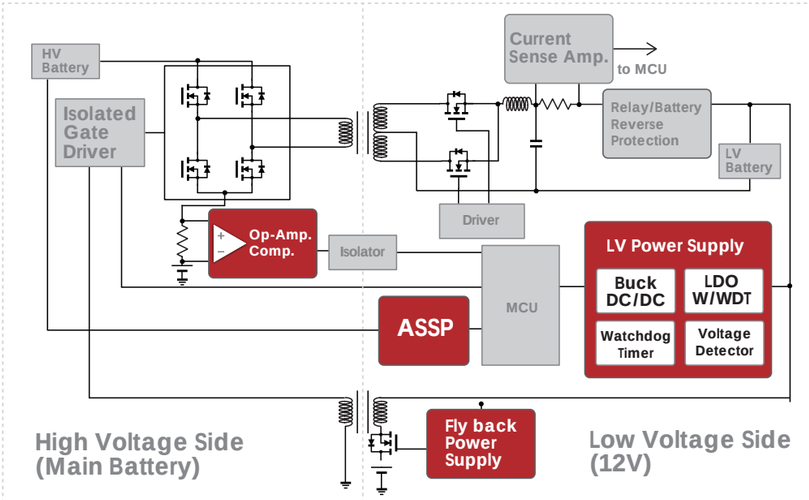

U.D. : Under development NEW : New product AEC : AEC-Q100 Compliant AEC : AEC-Q100 to be Compliant

♡ : Products available in PRODUCT LONGEVITY PROGRAM ♡xxxx : Products available in PRODUCT LONGEVITY PROGRAM with time limit

Operational Amplifier (Op-Amp.)

Part No.	No. of Circuit	Power Supply	Supply Voltage [V]		Characteristics					Operating Temp. Range [℃]		Automotive Quality Class	Package
					V_{IO} [mV]		I_{CC} [mA]		SR [V/μs]				
			min.	max.	typ.	max.	typ.	max.	typ.	min.	max.		
NJM2904B	2	Single	3	36	2	4	0.7	2	0.3	-40	125	Z2	MSOP8(VSP8)
NJM8208 ♡	2	Single	3	35	0.15	1	0.9	1.4	0.2	-40	125	Z	MSOP8(VSP8)
NJM8532 AEC ♡	2	Single	1.8	14	1	5	0.58	0.9	0.4	-40	125	Z	MSOP8(VSP8)
NJU7077 ♡	2	Single	2.2	5.5	0.02	0.4	1.2	1.8	0.5	-40	125	Z	MSOP8(VSP8)

Comparator

Part No.	No. of Circuit	Power Supply	Supply Voltage [V]		Characteristics					Operating Temp. Range [℃]		Automotive Quality Class	Package
					V_{IO} [mV]		I_{CC} [mA]		Propagation Delay [μs]				
			min.	max.	typ.	max.	typ.	max.	typ.	min.	max.		
NJM2903 ♡	2	Single	2	36	2	5	0.4	2	1.5	-40	125	Z2	MSOP8(VSP8)
NJU77242 AEC	2	Single	1.8	5.5	1	7	0.015	0.025	1.25	-40	125	Z2	MSOP8(VSP8)

ASSP

Part No.	key Features	Supply Voltage [V]		Automotive Quality Class	Package	key Features
		min.	max.			
NJU7890 AEC	1000V High Voltage Monitor IC	2.2	5.5	Z	PMAP11-PM	Common Mode Input Voltage Rangee : 1000V High Precision Attenuation Rate : ± 1% High Input Resistance : 30M Ω min.

Power Supply

- Automatic : Automatic Shift to ECO Mode
- Manual : Manual Shift to ECO Mode
- Peak : Peak Voltage, Duration time=200ms
- Thermal : Thermal Shutdown Circuit
- Ripple : Ripple Rejection, Frequency = 1kHz
- Discharge : Auto-discharge Function
- Reverse : Reverse Current Protection Circuit
- Constant : Constant Slope Circuit
- High Immunity : Enhanced Noise Immunity
- Inrush : Inrush Current Limit Circuit
- Diode : Diode Rectification
- Soft-Start : Soft-start Circuit
- UVLO : Undervoltage Lockout Circuit
- OVLO : Overvoltage Lockout Circuit
- OVP : Overvoltage Protection Circuit
- Phase : Phase Compensation
- SSCG : Spectrum Diffusion Type Oscillator
- PG : Power Good Function
- Sequencing : Start-up Sequencing Control

LDO Regulators

Part No.	Input Voltage Range [V]		Absolute Max. Ratings [V]	Output Current [mA]	Output Voltage Range*1[V]		Output Voltage Accuracy [%]	Supply Current [μA]	Operating Temp. Range [℃]		Automotive Quality Class	Package	key Features
	min.	max.			min.	max.	Full Temp.	typ.	min.	max.			
R1560 AEC ♡	5.5	60	80	100	1.8	14	± 1.5	3	-40	125	K	HSOP-6J TO-252-5-P2	Peak : 90V Thermal
R1561 AEC ♡	5.5	60	80	100	1.8	14	± 1.5	20	-40	125	K	HSOP-6J TO-252-5-P2	Peak : 90V Thermal
R1525 AEC ♡	3.5	42	50	200	1.8	12	± 1.6	2.2	-40	125	K	SOT-23-5 SOT-89-5 HSOP-6J HSOP-8E	Peak : 60V Thermal High Immunity
R5114 AEC ♡	3.5	42	50	250	3.3 VD: 2.5	5.0 VD: 4.8	± 1.6 VD: ± 1.6	8.5	-40	125	K	HSOP-8E HSOP-18 HQFN0808-28	Timeout WDT Peak : 60V Thermal
R5115 AEC ♡	3.5	42	50	250	3.3 VD: 2.5	5.0 VD: 4.8	± 1.6 VD: ± 1.6	8.5	-40	125	K	HSOP-8E HSOP-18 HQFN0808-28	Window WDT Peak : 60V Thermal
R1526 AEC ♡	3.5	42	50	300	1.8	9	± 1.6	32	-40	125	K	HSOP-8E	Peak : 60V Ripple : 50dB(f=100Hz) Thermal High Immunity
R5116 AEC ♡	3.5	42	50	500	3.3 UV: 2.5 OV: 3.3	5.0 UV: 5.0 OV: 5.5	-1.25 to 0.75 UV: -1.25 to 0.75 OV: -1.25 to 0.75	25	-40	125	K	HSOP-8E HQFN0808-28	Built-in Window VD Released Hysteresis: 0.7% (Max.) Peak : 60V Thermal
R5117 AEC ♡	3.5	42	50	500	3.3 SVD: 2.5 BVD: 3.5	5.0 SVD: 5.0 BVD: 12.0	-1.25 to 0.75 SVD:-1.25 to 0.75 BVD:-2.0 to 1.0	35	-40	125	K	HSOP-8E HQFN0808-28	Built-in Dual VD SVD Released Hysteresis: 0.7% (Max.) BVD Released Hysteresis: 5.0% (Max.) Peak : 60V Thermal
NJW4182 AEC	4.0	40	45	100	3.3	5.0	± 3.0	9	-40	125	H	SOT-23-5	Ultra-low current consumption Thermal
R1524 AEC ♡	3.5	36	50	200	1.8	12	± 1.6	2.2	-40	125	K	SOT-23-5 SOT-89-5 HSOP-6J HSOP-8E	Peak : 60V Thermal
R1517 AEC ♡	3.5	36	50	500	2.5(Fix) 2.5(Adj)	9(Fix) 20(Adj)	± 1.8(Fix) ± 45mV(Adj)	18	-40	125	K	HSOP-6J TO-252-5-P2	Constant : Constant : External Adjustable Ver. E/F Peak : 60V Thermal Discharge : Ver. D/F
R1518 AEC ♡	3.5	36	50	1000	2.5(Fix) 2.5(Adj)	9(Fix) 20(Adj)	± 1.8(Fix) ± 45mV(Adj)	18	-40	125	K	HSOP-6J TO-252-5-P2	Constant : Constant : External Adjustable Ver. E/F Peak : 60V Thermal Discharge : Ver. D/F
NJM2879 AEC	2.3	6.5	7	200	5.1	5.0	± 2.0	150	-40	125	H	SOT-23-5	Discharge Thermal Reverse
NJM12884 AEC	2.3	6.5	7	500	5.1	5.0	± 2.0	200	-40	125	H	DFN8-WA (ESON8-WA)	Discharge Thermal Soft-Start Reverse

*1 Please refer to the product data sheet for the output voltage lineup.

DC/DC(Buck Converter/SW.REG.)

Part No.	Input Voltage Range [V]		Absolute Max. Ratings [V]	Output Current [mA]	Output Voltage Range [V]		SW. Device	Rectification	SW. Control	Oscillation Frequency [kHz]		Maximum Duty [%]	External Clock Synchronization	Operating Temp. Range [℃]		Automotive Quality Class	Package	key Features
	min.	max.			min.	max.				min.	max.			min.	max.			
NEW R1260 AEC ♡	5.0	60	80	–	1 (Adj)	16 (Adj)	Controller	Synchronous Rectification	Forced PWM, PWM/VFM	150	600	–	Yes	-40	125	K	HSOP-18	Over Current Protection : Latch-type or Hiccup-type Tracking function Soft-Start : External Adjustable UVLO OVLO Thermal SSCG : Ver. xxxB/D PG Phase : External
NJW4152BA	4.4	40	45	600	0.8	38	Built-in MOSFET	Diode Rectification	PWM	300	1000	100	–	-40	125	Z	MSOP8 (VSP8)	Pulse-by-pulse current limit circui Thermal Soft-Start UVLO Phase : External

Power Supply

DC/DC(Buck Converter/SW.REG.)

Part No.	Input Voltage Range [V] min.	Input Voltage Range [V] max.	Absolute Max. Ratings [V]	Output Current [mA]	Output Voltage Range [V] min.	Output Voltage Range [V] max.	SW. Device	Rectification	SW. Control	Oscillation Frequency [kHz] min.	Oscillation Frequency [kHz] max.	Maximum Duty [%]	External Clock Synchronization	Operating Temp. Range [℃] min.	Operating Temp. Range [℃] max.	Automotive Quality Class	Package	key Features
R1271 AEC ♡ 2030	3.6	30	42	1000	3.3,5.0 (Fix)		Built-in MOS-FET	Synchronous Rectification	Forced PWM	2000 (Fix)		–	–	-40	125	K	DFN3030-12B HSOP-18	Over Current Protection : Latch-type or Hiccup-type Soft-Start : External Adjustable UVLO OVLO Thermal SSCG : Ver. xx1C/D PG

DC/DC(Boost Converter/SW.REG.)

Part No.	Input Voltage Range [V] min.	Input Voltage Range [V] max.	Absolute Max. Ratings [V]	Output Current [A]	Output Voltage Range [V] min.	Output Voltage Range [V] max.	SW. Device	SW. Control	Oscillation Frequency [kHz] min.	Oscillation Frequency [kHz] max.	Maximum Duty [%]	External Clock Synchronization	Operating Temp. Range [℃] min.	Operating Temp. Range [℃] max.	Automotive Quality Class	Package	key Features
NJW4140 AEC ♡	3.0	40	45	–	3.0	–	Controller	PWM	40	1000	85	–	-40	125	Z2	MSOP8 (VSP8)	Available for Fly-Back AEC=Z2 Pulse-by-pulse current limit circuit Soft-Start UVLO Diode

Voltage Detectors (VD), Watchdog Timers (WDT)

Part No.	Operating Voltage Range [V] min.	Operating Voltage Range [V] max.	Absolute Max. Ratings [V]	Detector Threshold Range [V] min.	Detector Threshold Range [V] max.	Detector Threshold Accuracy [%] Full Temp.	Release Delay Time	LDO	WDT	Supply Current [μA] typ.	Operating Temp. Range [℃] min.	Operating Temp. Range [℃] max.	Automotive Quality Class	Package	key Features
R3160 AEC ♡	2.7	60	80	10	48	± 1.75 *1 ± 1.5 *2	Adjustable	–	–	1.8	-40	125	K	SOT-23-6	*1 Detector Threshold 20V or lower *2 Detector Threshold 20.5V or higher
R5117 AEC ♡	3.5	42	50	BVD:3.5 SVD:2.5	BVD:12 SVD:5.0	BVD:-2 to 1 SVD:-1.25 to 0.75	Adjustable	Yes Io= 500mA	–	35	-40	125	K	HSOP-8E HQFN0808-28	Voltage Regulator with Battery Voltage Detector Peak : 60V Thermal
R3152 AEC ♡	3.0	42	50	OV:1.1 UV:1.0	OV:5.9 UV:4.8	-1.25 to 0.75	Adjustable	–	–	1.5	-40	125	K	SOT-23-6	Window Voltage Detector SENSE Pin Detection Type
R5116 AEC ♡	3.5	42	50	OV:3.3 UV:2.5	OV:5.5 UV:5.0	-1.25 to 0.75	Adjustable	Yes Io= 500mA	–	25	-40	125	K	HSOP-8E HQFN0808-28	Voltage Regulator with Window Voltage Detector Peak : 60V Thermal
R5114 AEC ♡	3.5	42	50	2.5	4.8	± 1.6	Adjustable	Yes Io= 250mA	Yes	8.5	-40	125	K	HSOP-8E HSOP-18 HQFN0808-28	Timeout WDT Peak : 60V Thermal
R5115 AEC ♡	3.5	42	50	2.5	4.8	± 1.6	Adjustable	Yes Io= 250mA	Yes	8.5	-40	125	K	HSOP-8E HSOP-18 HQFN0808-28	Window WDT Peak : 60V Thermal
R3154 AEC ♡	3.0	42	50	OV:0.75 UV:0.55	OV:3.7 UV:3.3	-1.25 to 0.75	Adjustable	–	–	2	-40	125	R	SOT-23-6	Applicable to failure diagnosis Window Voltage Detector SENSE Pin Detection Type
U.D. NP4271 AEC	4.0	40	45	4.6 4.1	5.6	Low: ± 2.0 High: ± 5.0	Adjustable	Yes Io= 500mA	Yes	120	-40	125	P	HSOP-8-AC	Window Voltage Detector
U.D. NV3601 AEC	2.4 (VDD) 0 (SENSE)	6 (VDD) 36 (SENSE)	7 (VDD) 42 (SENSE)	OV:4.5 UV:3.3	OV:22.2 UV:19.8	-1.25 to 0.75		–	–	TBD	-40	125	Q	SOT-23-5-DC	Window Voltage Detector
U.D. NV3600 AEC	2.4 (VDD) 0 (SENSE)	6 (VDD) 36 (SENSE)	7 (VDD) 42 (SENSE)	3.3	19.8	-1.25 to 0.75		–	–	TBD	-40	125	Q	SOT-23-5-DC	-VDET & +VDET Individually set voltage, +VDET setting range: 4.5V to +22.2V
R3121xxxxA AEC ♡	1.4	36	50	3	12	-2.2 to 2.5	Adjustable	–	–	3.8	-40	125	K	SOT-23-6	VDD Pin Detection Type
R3121xxxxE AEC ♡	2.4	6	7	3	12	-2.2 to 2.5	Adjustable	–	–	3.5	-40	125	K	SOT-23-6	SENSE Pin Detection Type

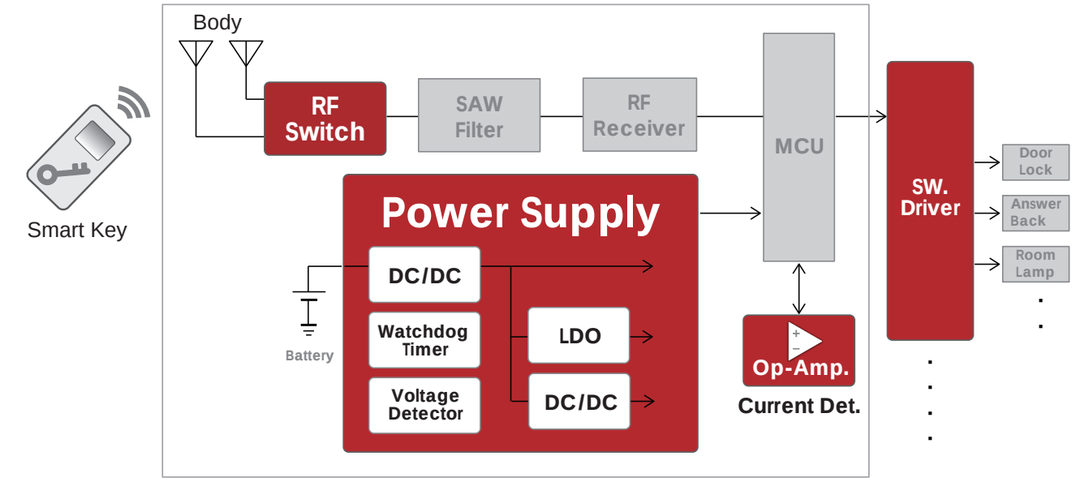

U.D. : Under development NEW : New product AEC : AEC-Q100 Compliant AEC : AEC-Q100 to be Compliant

♡ : Products available in PRODUCT LONGEVITY PROGRAM ♡ xxxx : Products available in PRODUCT LONGEVITY PROGRAM with time limit

Operational Amplifier (Op-Amp.)

Part No.	No. of Circuit	Power Supply	Supply Voltage [V] min.	Supply Voltage [V] max.	Characteristics V_{IO} [mV] typ.	V_{IO} [mV] max.	I_{CC} [mA] typ.	I_{CC} [mA] max.	SR [V/μs] typ.	Operating Temp. Range [℃] min.	Operating Temp. Range [℃] max.	Automotive Quality Class	Package
NJM2904B AEC	2	Single	3	36	2	4	0.7	2	0.3	-40	125	T1	MSOP8(VSP8)
NJU7057 ♡	2	Single	1.8	5.5	0.8	4	0.52	0.84	0.8	-40	125	T1	MSOP8(TVSP8)
NJU77552 AEC	2	Single	2.2	5.5	1	6.5	0.1	0.122	0.8	-40	125	T1	MSOP8(VSP8)

Power Supply

- Automatic : Automatic Shift to ECO Mode
- Manual : Manual Shift to ECO Mode
- Peak : Peak Voltage, Duration time=200ms
- Thermal : Thermal Shutdown Circuit
- Ripple : Ripple Rejection, Frequency = 1kHz
- Discharge : Auto-discharge Function
- Reverse : Reverse Current Protection Circuit
- Constant : Constant Slope Circuit
- High Immunity : Enhanced Noise Immunity
- Inrush : Inrush Current Limit Circuit
- Diode : Diode Rectification
- Soft-Start : Soft-start Circuit
- UVLO : Undervoltage Lockout Circuit
- OVLO : Overvoltage Lockout Circuit
- OVP : Overvoltage Protection Circuit
- Phase : Phase Compensation
- SSCG : Spectrum Diffusion Type Oscillator
- PG : Power Good Function
- Sequencing : Start-up Sequencing Control

LDO Regulators

Part No.	Input Voltage Range [V] min.	Input Voltage Range [V] max.	Absolute Max. Ratings [V]	Output Current [mA]	Output Voltage Range*1 [V] min.	Output Voltage Range*1 [V] max.	Output Voltage Accuracy [%] Full Temp.	Supply Current [μA] typ.	Operating Temp. Range [℃] min.	Operating Temp. Range [℃] max.	Automotive Quality Class	Package	key Features
R1525 AEC ♡	3.5	42	50	200	1.8	12	± 1.6	2.2	-40	125	A	SOT-23-5 SOT-89-5 HSOP-6J HSOP-8E	Peak : 60V Thermal High Immunity
R5112 AEC ♡	3.5	42	50	200	1.8 VD B: 1.6 D: 2.9	5.0 VD B: 4.8 D: 4.8	± 1.6 VD: ± 1.6	3.8	-40	125	K	HSOP-8E	+VD(Voltage Detector) Peak : 60V Thermal
R5114 AEC ♡	3.5	42	50	250	3.3 VD: 2.5	5.0 VD: 4.8	± 1.6 VD: ± 1.6	8.5	-40	125	K	HSOP-8E HSOP-18 HQFN0808-28	Timeout WDT Peak : 60V Thermal
R5115 AEC ♡	3.5	42	50	250	3.3 VD: 2.5	5.0 VD: 4.8	± 1.6 VD: ± 1.6	8.5	-40	125	K	HSOP-8E HSOP-18 HQFN0808-28	Window WDT Peak : 60V Thermal

*1 Please refer to the product data sheet for the output voltage lineup.

Power Supply

LDO Regulators

Part No.	Input Voltage Range [V] min.	Input Voltage Range [V] max.	Absolute Max. Ratings [V]	Output Current [mA]	Output Voltage Range*1 [V] min.	Output Voltage Range*1 [V] max.	Output Voltage Accuracy [%] Full Temp.	Supply Current [μA] typ.	Operating Temp. Range [℃] min.	Operating Temp. Range [℃] max.	Automotive Quality Class	Package	key Features
R1526 AEC ♡	3.5	42	50	300	1.8	9	± 1.6	32	-40	125	A	HSOP-8E	Peak : 60V Ripple : 50dB(f=100Hz) Thermal High Immunity
R5116 AEC ♡	3.5	42	50	500	3.3 UV: 2.5 OV: 3.3	5.0 UV: 5.0 OV: 5.5	-1.25 to 0.75 UV: -1.25 to 0.75 OV: -1.25 to 0.75	25	-40	125	K	HSOP-8E HQFN0808-28	Built-in Window VD Released Hysteresis: 0.7% (Max.) Peak : 60V Thermal
R5117 AEC ♡	3.5	42	50	500	3.3 SVD: 2.5 BVD: 3.5	5.0 SVD: 5.0 BVD:12.0	-1.25 to 0.75 SVD:-1.25 to 0.75 BVD:-2.0 to 1.0	35	-40	125	K	HSOP-8E HQFN0808-28	Built-in Dual VD SVD Released Hysteresis: 0.7% (Max.) BVD Released Hysteresis: 5.0% (Max.) Peak : 60V Thermal
NJW4182 AEC	4.0	40	45	100	3.3	5.0	± 3.0	9	-40	125	H	SOT-23-5	Ultra-low current consumption Thermal
NJW4182 ♡	4.0	40	45	100	3.3	5.0	± 3.0	9	-40	125	T1	SOT-23-5	Ultra-low current consumption Thermal
NJW4104 AEC	4.0	40	45	200	3.3	5.0	± 2.0	A ver.:5.5 B ver.:5.0	-40	125	T1	SOT-89-5-2 SOT-89-3	Ultra-low current consumption UVLO Thermal
NJW4107 AEC ♡	4.0	40	45	300	3.3	5.0	± 1.5	A ver.:75 B ver.:70	-40	125	T1	SOT-89-5-2 SOT-89-3	Fast Transient Response UVLO Thermal
NJW4105 AEC	4.0	40	45	500	3.3	8.0	± 1.5	65	-40	125	T1	TO-252-5-L5	Fast Transient Response Output voltage accuracy includes regulation Thermal
NJW4106 AEC	4.0	40	45	500	2.5	16	VADJ ± 2.0	65	-40	125	T1	TO-252-5-L5	Fast Transient Response Adjustable Type Output voltage accuracy includes regulation Thermal
U.D. NP4271 AEC	4.0	40	45	500	3.3	5.0	± 2.0	120	-40	125	P	HSOP-8-AC	WDT, Window VD
R1524 AEC ♡	3.5	36	50	200	1.8	12	± 1.6	2.2	-40	125	A	SOT-23-5 SOT-89-5 HSOP-6J HSOP-8E	Peak : 60V Thermal
R5111 AEC ♡	3.5	36	50	300	1.8 VD: 1.6	5.0 VD: 5.5	± 1.5 VD: ± 1.8	25	-40	125	K	HSOP-8E HSOP-18 HQFN0808-28	Timeout or Window WDT Peak : 60V Thermal Inrush
R1517 AEC ♡	3.5	36	50	500	2.5(Fix) 2.5(Adj)	9(Fix) 20(Adj)	± 1.8(Fix) ± 45mV (Adj)	18	-40	125	A	HSOP-6J TO-252-5-P2	Constant : External Adjustable Ver. E/F Peak : 60V Thermal Discharge : Ver. D/F
R1518 AEC ♡	3.5	36	50	1000	2.5(Fix) 2.5(Adj)	9(Fix) 20(Adj)	± 1.8(Fix) ± 45mV (Adj)	18	-40	125	A	HSOP-6J TO-252-5-P2	Constant : External Adjustable Ver. E/F Peak : 60V Thermal Discharge : Ver. D/F
U.D. NJM11100 AEC	2.1	18	20	240	1.3	17	Vref ± 2.5	200	-40	125	T1	SOT-23-6-1	Ripple : 75dB(f=1kHz) Adjustable Type With Noise Bypass Pin Thermal Reverse
RP170 AEC ♡	2.6	10	12	300	1.2	6	± 3.0	23	-40	105	A	SOT-23-5 SOT-89-5	Ripple : 70dB Thermal Constant Discharge : Ver. D
NJM2879 AEC	2.3	6.5	7	200	5.1	5.0	± 2.0	150	-40	125	H	SOT-23-5	Discharge Thermal Reverse
NJM12884 AEC	2.3	6.5	7	500	5.1	5.0	± 2.0	200	-40	125	H	DFN8-WA (ESON8-WA)	Discharge Thermal Soft-Start Reverse

*1 Please refer to the product data sheet for the output voltage lineup.

Part No.	Input Voltage Range [V] min.	Input Voltage Range [V] max.	Absolute Max. Ratings [V]	Output Current [mA]	Output Voltage Range*1 [V] min.	Output Voltage Range*1 [V] max.	Output Voltage Accuracy [%] Full Temp.	Supply Current [μA] typ.	Operating Temp. Range [℃] min.	Operating Temp. Range [℃] max.	Automotive Quality Class	Package	key Features
RP132 AEC ♡	1.4	6.5	7	1000	0.8(Fix) 0.8(Adj)	5(Fix) 5.5(Adj)	± 1.9(Fix) ± 29mV (Adj)	65	-40	105	A	SOT-89-5 HSOP-6J TO-252-5-P2	Ripple : 70dB Thermal Inrush Discharge : Ver. D
NEW NR1640 AEC ♡	2.7	5.5	6.5	200	2.5	4.8	± 1.5	350	-40	125	P	SOT-23-5-DC	Outout noise : 6μVrms Ripple : 80dB(f=100kHz) Thermal Discharge
RP111 AEC ♡	1.4	5.25	6	500	0.7(Fix) 0.7(Adj)	3.4(Fix) 3.6(Adj)	± 1.5(Fix) ± 50mV (Adj)	80	-40	105	A	SOT-23-5 SOT-89-5 HSOP-6J	Load regulation: Typ. 1mV Load transient response accuracy: Typ. -75mV/+45mV, 1mA ⇔ 250mA (1/2 IOUT (Max.)) Ripple : 75dB Thermal Inrush Discharge : Ver. D

*1 Please refer to the product data sheet for the output voltage lineup.

DC/DC(Buck Converter/SW.REG.)

Part No.	Input Voltage Range [V] min.	Input Voltage Range [V] max.	Absolute Max. Ratings [V]	Output Current [mA]	Output Voltage Range [V] min.	Output Voltage Range [V] max.	SW. Device	Rectification	SW. Control	Oscillation Frequency [kHz] min.	Oscillation Frequency [kHz] max.	Maximum Duty [%]	External Clock Synchronization	Operating Temp. Range [℃] min.	Operating Temp. Range [℃] max.	Automotive Quality Class	Package	key Features
U.D. NC2905 AEC	4.0	75	80	1500	TBD	TBD	Built-in MOSFET	Diode Rectification	PWM	100	2400	100	Yes	-40	125	P	HSOP-8-AC	Over Current Protection (Hiccup type) Thermal Soft-Start UVLO SSCG Phase : External PG
U.D. NJW4175 AEC	3.4	40	45	600	0.8	26	Built-in MOSFET	Synchronous Rectification	PWM/ PFM	2100 (Fix)		100	Yes	-40	125	T1	HSOP8-M1	Light Load Mode Over Current Protection (Hiccup type) Soft-Start Phase : Internal PG
NJW4171 AEC	3.4	40	45	2500	0.8	38	Built-in MOSFET	Diode Rectification	PWM/ PFM (A) PWM (B)	100	2400	100	Yes	-40	125	T1	HSOP8-M1	Light Load Mode(A ver.) External Clock Synchronization Over Current Protection (Hiccup type) Thermal Soft-Start UVLO Phase : External PG
R1271 AEC ♡ 2030	3.6	30	42	1000	3.3,5.0 (Fix)		Built-in MOSFET	Synchronous Rectification	Forced PWM	2000 (Fix)		–	–	-40	125	K/A	DFN3030-12B HSOP-18	Over Current Protection : Latch-type or Hiccup-type Soft-Start : External Adjustable UVLO OVLO Thermal SSCG : Ver. xx1C/D PG
R1278 AEC ♡ 2030	3.6	30	36	2000	3.3 (Adj)	5.0 (Adj)	Built-in MOSFET	Synchronous Rectification	Forced PWM	1800	2200	–	Yes	-40	125	K/A	HSOP-18	Over Current Protection : Hiccup-type Tracking function Soft-Start : External Adjustable UVLO OVLO Thermal SSCG : Ver. 003C PG Phase : External
R1276 AEC ♡ 2030	3.6	30	36	3000	0.7 (Adj)	6.5 (Adj)	Built-in MOSFET	Synchronous Rectification	Forced PWM, PWM/ VFM	250	1000	–	Yes	-40	125	K/A	HSOP-18	Over Current Protection : Hiccup-type Tracking function Soft-Start : External Adjustable UVLO OVLO Thermal SSCG : Ver. 00xC PG Phase : External
RP550 AEC ♡	2.3	4.5 or 5.5	6.5	1000 × 2ch.	0.6 (Adj)	3.3 (Adj)	Built-in MOSFET	Synchronous Rectification	Forced PWM, PWM/ VFM	2300 (Fix)		100	–	-40	105	A	DFN3030-12	2ch. Over Current Protection : Latch-type Soft-Start UVLO Thermal
RP506 AEC ♡	2.5	4.5 or 5.5	6.5	2000	0.8 (Fix) 0.6/0.8 (Adj)	3.3 (Fix) 4.0 (Adj)	Built-in MOSFET	Synchronous Rectification	Forced PWM, PWM/ VFM	1200 (Fix) 2300 (Fix)		100	–	-40	A:105 K:125	K/A	DFN3030-12	Over Current Protection : Latch-type Soft-Start : External Adjustable UVLO Thermal PG Discharge : Ver. H/L
RP510 AEC ♡	2.5	5.5	6.5	4000	0.8 (Fix/ Adj)	3.3 (Fix/ Adj)	Built-in MOSFET	Synchronous Rectification	Forced PWM	2300 (Fix)		100	–	-40	A:105 K:125	K/A	DFN3030-12	Over Current Protection : Latch-type or Fold back-type Soft-Start : External Adjustable UVLO Thermal PG Discharge : Ver. H/N

Power Supply

Voltage Detectors (VD), Watchdog Timers (WDT)

Part No.	Operating Voltage Range[V] min.	Operating Voltage Range[V] max.	Absolute Max. Ratings [V]	Detector Threshold Range[V] min.	Detector Threshold Range[V] max.	Detector Threshold Accuracy[%] Full Temp.	Release Delay Time	LDO	WDT	Supply Current [μA] typ.	Operating Temp. Range [℃] min.	Operating Temp. Range [℃] max.	Automotive Quality Class	Package	key Features
R5117 AEC ♡	3.5	42	50	BVD:3.5 SVD:2.5	BVD:12 SVD:5.0	BVD:-2 to 1 SVD:-1.25 to 0.75	Adjustable	Yes Io= 500mA	–	35	-40	125	K	HSOP-8E HQFN0808-28	Voltage Regulator with Battery Voltage Detector Peak : 60V Thermal
R3152 AEC ♡	3.0	42	50	OV:1.1 UV:1.0	OV:5.9 UV:4.8	-1.25 to 0.75	Adjustable	–	–	1.5	-40	125	K/A	SOT-23-6	Window Voltage Detector SENSE Pin Detection
R5116 AEC ♡	3.5	42	50	OV:3.3 UV:2.5	OV:5.5 UV:5.0	-1.25 to 0.75	Adjustable	Yes Io= 500mA	–	25	-40	125	K	HSOP-8E HQFN0808-28	Voltage Regulator with Window Voltage Detector Peak : 60V Thermal
R5112 AEC ♡	3.5	42	50	B:1.6 D:2.9	B:4.8 D:4.8	± 1.6	Adjustable	Yes Io= 200mA	–	3.8	-40	125	K	HSOP-8E	Voltage Regulator with VD Peak : 60V Thermal
R5114 AEC ♡	3.5	42	50	2.5	4.8	± 1.6	Adjustable	Yes Io= 250mA	Yes	8.5	-40	125	K	HSOP-8E HSOP-18 HQFN0808-28	Timeout WDT Peak : 60V Thermal
R5115 AEC ♡	3.5	42	50	2.5	4.8	± 1.6	Adjustable	Yes Io= 250mA	Yes	8.5	-40	125	K	HSOP-8E HSOP-18 HQFN0808-28	Window WDT Peak : 60V Thermal
R3154 AEC ♡	3.0	42	50	OV:0.75 UV:0.55	OV:3.7 UV:3.3	-1.25 to 0.75	Adjustable	–	–	2	-40	125	R/A	SOT-23-6	Applicable to failure diagnosis Window Voltage Detector SENSE Pin Detection Type
U.D. NP4271 AEC	4.0	40	45	4.6 4.1	5.6	Low: ± 2.0 High: ± 5.0	Adjustable	Yes Io= 500mA	Yes	120	-40	125	P	HSOP-8-AC	Window Voltage Detector
R3121xxxxA AEC ♡	1.4	36	50	3	12	-2.2 to 2.5	Adjustable	–	–	3.8	-40	125	K	SOT-23-6	VDD Pin Detection Type
R5111 AEC ♡	3.5	36	50	1.6	5.5	± 1.8	Adjustable	Yes Io= 300mA	Yes	25	-40	125	K	HSOP-8E HSOP-18 HQFN0808-28	Timeout or Window WDT Peak : 60V Thermal Inrush
R3121xxxxE AEC ♡	2.4	6	7	3	12	-2.2 to 2.5	Adjustable	–	–	3.5	-40	125	K	SOT-23-6	SENSE Pin Detection Type
R5106 AEC ♡	0.9	6	7	1.5	5.5	-2.8 to 1.5	Adjustable	–	Yes	11	-40	J: 105 A: 125	J/A	SOT-23-6	Timeout WDT CD pin and CTW pin are combined.

Switching Driver (Gate Driver)

Part No.	Supply Voltage [V] min.	Supply Voltage [V] max.	Absolute Max. Ratings [V]	Output Current (Source) [A] typ.	Output Current (Sink) [A] typ.	Output Rise Time [nsec] typ.	Output Fall Time [nsec] typ.	Operating Temp. Range [℃] min.	Operating Temp. Range [℃] max.	Automotive Quality Class	Features	Function	Package
NJW4841 ♡	4.0	20	40	2.0	2.0	25	20	-40	125	T1	Built-in Thermal Shut Down Under Voltage Lockout	Low side Nch. Gate Drive	MSOP8(VSP8)

Switching Driver (High Side Switch/Low Side Switch)

Part No.	Absolute Max. Ratings [V] Drain-Source Voltage	Absolute Max. Ratings [V] Input Voltage	Drain-Source Voltage [V] max.	Supply Voltage Range [V] min.	Supply Voltage Range [V] max.	Input Voltage Range [V] min.	Input Voltage Range [V] max.	Quiescent Current [μA]	Input Current [μA]	Drain Current [A]	On-Resistance [Ω]	Operating Temp. Range [℃] min.	Operating Temp. Range [℃] max.	Automotive Quality Class	Function	Package
NJW4830 ♡	45	6.0	40	4.6	40	2.64	5.5	110	150	0.5	0.35	-40	125	T1	High Side Switch (P ch.)	SOT-89-5-2

RF Devices

RF Switches

Part No.	Function	P-0.2dB [dBm]	Insertion Loss [dB]	Isolation [dB]	Frequency Range [GHz]	Automotive Quality Class	Package Size [mm]
NJG1801K75	SPDT	30@2.5GHz 30@5.9GHz	0.35@2.4 to 2.5GHz 0.45@4.9 to 5.9GHz	28@2.4 to 2.5GHz 30@4.9 to 5.9GHz	0.05 to 6	–	1.0x1.0x0.375
NJG1801AKGC-A NJG1801BKGC-A AEC	SPDT	30@2.5GHz 30@5.9GHz	0.35@2.4 to 2.5GHz 0.45@4.9 to 5.9GHz 0.6@8.5GHz	28@2.4 to 2.5GHz 27@4.9 to 5.9GHz 18@8.5GHz	0.05 to 8.5	A	1.6x1.6x0.78
NJG1815K75	SPDT	30@2.5GHz 30@5.9GHz	0.45@2.4 to 2.5GHz 0.40@4.9 to 6GHz	25@2.4 to 2.5GHz 25@4.9 to 6GHz	1 to 6	–	1.0x1.0x0.375
NJG1815AK75-A AEC	SPDT	30@2.5GHz 30@5.9GHz	0.45@2.4 to 2.5GHz 0.40@4.9 to 6GHz	25@2.4 to 2.5GHz 25@4.9 to 6GHz	1 to 6	A	1.0x1.0x0.375

(Note)Since they include products for general consumer use, please contact our sales office when you consider it.

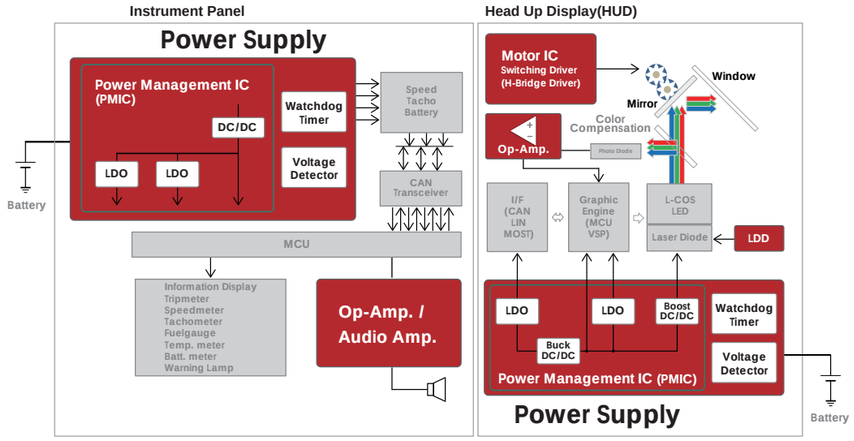

U.D. : Under development NEW : New product AEC : AEC-Q100 Compliant AEC : AEC-Q100 to be Compliant

♡ : Products available in PRODUCT LONGEVITY PROGRAM ♡xxxx : Products available in PRODUCT LONGEVITY PROGRAM with time limit

Operational Amplifier (Op-Amp.)

Part No.	No. of Circuit	Power Supply	Supply Voltage [V] min.	Supply Voltage [V] max.	Characteristics V_{IO} [mV] typ.	V_{IO} [mV] max.	I_{CC} [mA] typ.	I_{CC} [mA] max.	SR [V/μs] typ.	Operating Temp. Range [℃] min.	Operating Temp. Range [℃] max.	Automotive Quality Class	Package
NJM8532	2	Single	1.8	14	1	5	0.58	0.9	0.4	-40	125	T1	MSOP8(VSP8)
NJU7047	2	Single	2.7	5.5	0.9	5	2.7	4.5	9	-40	125	T1	MSOP8(TVSP8)
NJU77552 AEC	2	Single	2.2	5.5	1	6.5	0.1	0.122	0.8	-40	125	T1	MSOP8(VSP8)
NJU77701	1	Single	2.4	5.5	0.4	1.8	3.8	4.8	35	-40	125	T1	SOT-23-5

Power Supply

- Automatic : Automatic Shift to ECO Mode
- Manual : Manual Shift to ECO Mode
- Peak : Peak Voltage, Duration time=200ms
- Thermal : Thermal Shutdown Circuit
- Ripple : Ripple Rejection, Frequency = 1kHz
- Discharge : Auto-discharge Function
- Reverse : Reverse Current Protection Circuit
- Constant : Constant Slope Circuit
- High Immunity : Enhanced Noise Immunity
- Inrush : Inrush Current Limit Circuit
- Diode : Diode Rectification
- Soft-Start : Soft-start Circuit
- UVLO : Undervoltage Lockout Circuit
- OVLO : Overvoltage Lockout Circuit
- OVP : Overvoltage Protection Circuit
- Phase : Phase Compensation
- SSCG : Spectrum Diffusion Type Oscillator
- PG : Power Good Function
- Sequencing : Start-up Sequencing Control

LDO Regulators

Part No.	Input Voltage Range [V] min.	Input Voltage Range [V] max.	Absolute Max. Ratings [V]	Output Current [mA]	Output Voltage Range*1 [V] min.	Output Voltage Range*1 [V] max.	Output Voltage Accuracy [%] Full Temp.	Supply Current [μA] typ.	Operating Temp. Range [℃] min.	Operating Temp. Range [℃] max.	Automotive Quality Class	Package	key Features
R1560 AEC ♡	5.5	60	80	100	1.8	14	± 1.5	3	-40	125	A	HSOP-6J TO-252-5-P2	Peak : 90V Thermal
R5112 AEC ♡	3.5	42	50	200	1.8 VD B: 1.6 D: 2.9	5.0 VD B: 4.8 D: 4.8	± 1.6 VD: ± 1.6	3.8	-40	125	A	HSOP-8E	+VD(Voltage Detector) Peak : 60V Thermal
NJW4104 AEC	4.0	40	45	200	3.3	5.0	± 2.0	A ver.:5.5 B ver.:5.0	-40	125	T1	SOT-89-5-2 SOT-89-3	Ultra-low current consumption UVLO Thermal
NJW4107 AEC ♡	4.0	40	45	300	3.3	5.0	± 1.5	A ver.:75 B ver.:70	-40	125	T1	SOT-89-5-2 SOT-89-3	Fast Transient Response UVLO Thermal
NJW4105 AEC	4.0	40	45	500	3.3	8.0	± 1.5	65	-40	125	T1	TO-252-5-L5	Fast Transient Response Output voltage accuracy includes regulation Thermal

*1 Please refer to the product data sheet for the output voltage lineup.

Power Supply

LDO Regulators

Part No.	Input Voltage Range [V]		Absolute Max. Ratings [V]	Output Current [mA]	Output Voltage Range*1 [V]		Output Voltage Accuracy [%]	Supply Current [μA]	Operating Temp. Range [℃]		Automotive Quality Class	Package	key Features
	min.	max.			min.	max.	Full Temp.	typ.	min.	max.			
NJW4106 AEC	4.0	40	45	500	2.5	16	VADJ ± 2.0	65	-40	125	T1	TO-252-5-L5	Fast Transient Response Adjustable Type Output voltage accuracy includes regulation Thermal
U.D. NP4271 AEC	4.0	40	45	500	3.3	5.0	± 2.0	120	-40	125	P	HSOP-8-AC	WDT, Window VD
R1524 AEC ♡	3.5	36	50	200	1.8	12	± 1.6	2.2	-40	125	A	SOT-23-5 SOT-89-5 HSOP-6J HSOP-8E	Peak : 60V Thermal
R1517 AEC ♡	3.5	36	50	500	2.5(Fix) 2.5(Adj)	9(Fix) 20(Adj)	± 1.8(Fix) ± 45mV(Adj)	18	-40	125	A	HSOP-6J TO-252-5-P2	Constant : Constant : External Adjustable Ver. E/F Peak : 60V Discharge : Ver. D/F Thermal
U.D. NJM11100 AEC	2.1	18	20	240	1.3	17	Vref ± 2.5	200	-40	125	T1	SOT-23-6-1	Ripple : 75dB(f=1kHz) Adjustable Type With Noise Bypass Pin Thermal Reverse
RP171 AEC ♡	2.6	10	12	150	1.2	6	-3.5 to 3	23	-40	105	A	SOT-23-5	Ripple : 70dB Thermal Constant Discharge : Ver. D
RP170 AEC ♡	2.6	10	12	300	1.2	6	± 3.0	23	-40	105	A	SOT-23-5 SOT-89-5	Ripple : 70dB Thermal Constant Discharge : Ver. D
RP130 AEC ♡	1.7	6.5	7	150	1.2	5	± 1.5	38	-40	105	A	DFN1212-4 SOT-23-5	Ripple : 80dB Discharge : Ver. D
NJM2879 AEC	2.3	6.5	7	200	5.1	5.0	± 2.0	150	-40	125	H	SOT-23-5	Discharge Thermal Reverse
NJM12884 AEC	2.3	6.5	7	500	5.1	5.0	± 2.0	200	-40	125	H	DFN8-WA (ESON8-WA)	Discharge Thermal Soft-Start Reverse
RP132 AEC ♡	1.4	6.5	7	1000	0.8(Fix) 0.8(Adj)	5(Fix) 5.5(Adj)	± 1.9(Fix) ± 29mV(Adj)	65	-40	105	A	SOT-89-5 HSOP-6J TO-252-5-P2	Ripple : 70dB Thermal Inrush Discharge : Ver. D
NEW NR1640 AEC ♡	2.7	5.5	6.5	200	2.5	4.8	± 1.5	350	-40	125	P	SOT-23-5-DC	Output noise : 6μVrms Ripple : **80dB(f=100kHz)** Discharge Thermal
RP111 AEC ♡	1.4	5.25	6	500	0.7(Fix) 0.7(Adj)	3.4(Fix) 3.6(Adj)	± 1.5(Fix) ± 50mV(Adj)	80	-40	105	A	SOT-23-5 SOT-89-5 HSOP-6J	Load regulation: Typ. 1mV Load transient response accuracy:Typ. -75mV/+45mV, 1mA ⇔ 250mA (1/2 IOUT (Max.)) Ripple : 75dB Thermal Inrush Discharge : Ver. D
RP115 AEC ♡	1.4	5.25	6	500 1000	0.9	3.9	-1.9 to 1.5	110	-40	105	A	DFN2020-8B SOT-89-5	Load regulation: Typ. 1mV Temperature Characteristics : Typ. ± 30ppm/℃ Ripple : 75dB 80dB (VSET ≦ 1.8V) Thermal Reverse Constant Discharge : Ver. D Inrush

*1 Please refer to the product data sheet for the output voltage lineup.

DC/DC(Buck Converter/SW.REG.)

Part No.	Input Voltage Range [V]		Absolute Max. Ratings [V]	Output Current [mA]	Output Voltage Range [V]		SW. Device	Rectification	SW. Control	Oscillation Frequency [kHz]		Maximum Duty [%]	External Clock Synchronization	Operating Temp. Range[℃]		Automotive Quality Class	Package	key Features
	min.	max.			min.	max.				min.	max.			min.	max.			
U.D. NC2905 AEC	4.0	75	80	1500	TBD	TBD	Built-in MOS-FET	Diode Rectifi i cation	PWM	100	2400	100	Yes	-40	125	P	HSOP-8-AC	Over Current Protection (Hiccup type) Thermal Soft-Start UVLO SSCG Phase : External PG

Part No.	Input Voltage Range [V]		Absolute Max. Ratings [V]	Output Current [mA]	Output Voltage Range [V]		SW. Device	Rectification	SW. Control	Oscillation Frequency [kHz]		Maximum Duty [%]	External Clock Synchronization	Operating Temp. Range[℃]		Automotive Quality Class	Package	key Features
	min.	max.			min.	max.				min.	max.			min.	max.			
NJW4171 AEC	3.4	40	45	2500	0.8	38	Built-in MOS-FET	Diode Rectifi i cation	PWM/PFM(A) PWM(B)	100	2400	100	Yes	-40	125	T1	HSOP8-M1	Light Load Mode Over Current Protection (Hiccup type) Soft-Start Phase : Internal PG
U.D. NJW4175 AEC	3.4	40	45	600	0.8	26	Built-in MOS-FET	Syn-chro-nous Rectifi i cation	PWM/PFM	2100 (Fix)		100	Yes	-40	125	T1	HSOP8-M1	Light Load Mode(A ver.) External Clock Synchronization Over Current Protection (Hiccup type) Thermal Soft-Start UVLO Phase : External PG
U.D. R1277 AEC	4.0	34	36	8000	0.7 (Adj)	5.3 (Adj)	Built-in MOS-FET	Syn-chro-nous Rectifi i cation	Forced PWM, PWM/VFM	250	1000	–	Yes	-40	125	A	QFN0505-**31**	Over Current Protection : Latch-type or Hiccup-type Tracking function Soft-Start : External UVLO OVP Thermal SSCG : Ver. 03x/13x PG Phase : External
R1272 AEC ♡	4.0	34	36	–	0.7 (Adj)	5.3 (Adj)	Con-trol-ler	Syn-chro-nous Rectifi i cation	Forced PWM, PWM/VFM	250	1000	–	Yes	-40	125	A	HSOP-18	Over Current Protection : Latch-type or Hiccup-type Tracking function Soft-Start : External UVLO OVP Thermal SSCG : Ver. 03x/ 13x PG Phase : External
R1271 AEC ♡ 2030	3.6	30	42	1000	3.3,5.0 (Fix)		Built-in MOS-FET	Syn-chro-nous Rectifi i cation	Forced PWM	2000 (Fix)		–	–	-40	125	A	DFN3030-12B HSOP-18	Over Current Protection : Latch-type or Hiccup-type Soft-Start : External UVLO OVLO Thermal SSCG : Ver. xx1C/D PG
R1278 AEC ♡ 2030	3.6	30	36	2000	3.3 (Adj)	5.0 (Adj)	Built-in MOS-FET	Syn-chro-nous Rectifi i cation	Forced PWM	1800	2200	–	Yes	-40	125	A	HSOP-18	Over Current Protection : Hiccup-type Tracking function Soft-Start : External UVLO OVLO Thermal SSCG : Ver. 003C PG Phase : External
R1276 AEC ♡ 2030	3.6	30	36	3000	0.7 (Adj)	6.5 (Adj)	Built-in MOS-FET	Syn-chro-nous Rectifi i cation	Forced PWM, PWM/VFM	250	1000	–	Yes	-40	125	A	HSOP-18	Over Current Protection : Hiccup-type Tracking function Soft-Start : External UVLO OVLO Thermal SSCG : Ver. 00xC PG Phase : External
RP550 AEC ♡	2.3	4.5 or 5.5	6.5	1000 × 2ch.	0.6 (Adj)	3.3 (Adj)	Built-in MOS-FET	Syn-chro-nous Rectifi i cation	Forced PWM, PWM/VFM	2300 (Fix)		100	–	-40	105	A	DFN3030-12	2ch. Over Current Protection : Latch-type Soft-Start UVLO Thermal
RP506 AEC ♡	2.5	4.5 or 5.5	6.5	2000	0.8 (Fix) 0.6/0.8 (Adj)	3.3 (Fix) 4.0 (Adj)	Built-in MOS-FET	Syn-chro-nous Rectifi i cation	Forced PWM, PWM/VFM	1200 (Fix) 2300 (Fix)		100	–	-40	105	A	DFN3030-12	Over Current Protection : Latch-type Soft-Start : External UVLO Thermal PG Discharge : Ver. H/L
NJW4110 ♡	2.7	5.5	7.0	3000	0.6	5.0	Built-in MOS-FET	Syn-chro-nous Rectifi i cation	PWM	100	2400	100	Yes	-40	125	T1	EQFN24-LE	Light Load Mode Over Current Protection (Hiccup type) Thermal Soft-Start : External UVLO PG
RP510 AEC ♡	2.5	5.5	6.5	4000	0.8 (Fix/ Adj)	3.3 (Fix/ Adj)	Built-in MOS-FET	Syn-chro-nous Rectifi i cation	Forced PWM	2300 (Fix)		100	–	-40	105	A	DFN3030-12	Over Current Protection : Latch-type or Fold back-type Soft-Start : External UVLO Thermal PG Discharge : Ver. H/N

Power Supply

DC/DC(Boost Converter/SW.REG.)

Part No.	Input Voltage Range [V] min.	Input Voltage Range [V] max.	Absolute Max. Ratings [V]	Output Current [A]	Output Voltage Range [V] min.	Output Voltage Range [V] max.	SW. Device	SW. Control	Oscillation Frequency [kHz] min.	Oscillation Frequency [kHz] max.	Maximum Duty [%]	External Clock Synchronization	Operating Temp. Range [℃] min.	Operating Temp. Range [℃] max.	Automotive Quality Class	Package	key Features
NJW4132 ♡	4.55	40	45	1.75	4.55	38	Built-in MOS-FET	PWM	2000 (Fix)		80	Yes	-40	125	T1	SOT-89-5-2	PWM, External Clock Synchronization Over Current Protection (Hiccup type) Thermal Soft-Start UVLO Phase
NJW4133 AEC	3.0	40	45	5.0	3.0	38	Built-in MOS-FET	PWM	100	2400	92	Yes	-40	125	T1	HSOP8-M1	Over Current Protection (Hiccup type) Thermal Soft-Start OVP UVLO
NJW4140 ♡	3.0	40	45	–	3.0	–	Con-troller	PWM	40	1000	85	–	-40	125	T1	MSOP8(VSP8)	Available for Fly-Back AEC=Z2 Pulse-by-pulse current limit circuit Soft-Start UVLO
NJW1871 AEC ♡	2.5	40	45	–	2.5	–	Con-troller	PWM	50	1000	87	Yes	-40	125	T1	MSOP10(VSP10)	5.2V Gate Drive Available for Fly-Back RUN function Over Current Protection (Hiccup type) Thermal Soft-Start UVLO OVP
NJW4142 AEC ♡	2.5	40	45	–	2.5	–	Con-troller	PWM	50	1000	87	Yes	-40	125	T1	MSOP10(VSP10)	10V Gate Drive Available for Fly-Back RUN function Over Current Protection (Hiccup type) Thermal Soft-Start UVLO OVP
U.D. NJW1871A AEC	4.5 (TBD)	40	45	–	4.5 (TBD)	–	Con-troller	PWM	1000	2000 (TBD)	(TBD)	Yes	-40	125	T1	MSOP10(VSP10)	5.2V Gate Drive Available for Fly-Back RUN function Over Current Protection (Hiccup type) Thermal Soft-Start UVLO OVP
R1294 AEC ♡	2	5.5	6.5	2	Up to 20 Adjustable		Built-in MOS-FET	PWM	210	1400	91	Yes	-40	105	A	QFN0404-24B	for LCD/CCD/OLED +CP : 1/4th operating frequency Sequencing Soft-Start : External Adjustable UVLO

Voltage Detectors (VD), Watchdog Timers (WDT)

Part No.	Operating Voltage Range [V] min.	Operating Voltage Range [V] max.	Absolute Max. Ratings [V]	Detector Threshold Range [V] min.	Detector Threshold Range [V] max.	Detector Threshold Accuracy [%] Full Temp.	Release Delay Time	LDO	WDT	Supply Current [μA] typ.	Operating Temp. Range [℃] min.	Operating Temp. Range [℃] max.	Automotive Quality Class	Package	key Features
R5112 AEC ♡	3.5	42	50	B:1.6 D:2.9	B:4.8 D:4.8	± 1.6	Ad-just-able	Yes Io= 200mA	–	3.8	-40	125	A	HSOP-8E	Voltage Regulator with VD Peak : 60V Thermal
U.D. NP4271 AEC	4.0	40	45	4.6 4.1	5.6	Low: ± 2.0 High: ± 5.0	Ad-just-able	Yes Io= 500mA	Yes	120	-40	125	P	HSOP-8-AC	Window Voltage Detector
R3119xxxxA AEC ♡	1.2	36	50	2.3	12	-3 to 2	Ad-just-able	–	–	3.3	-40	105	J	SOT-23-5	
R3151xxxxA/B AEC ♡	1.4	36	50	5	10	± 2	Ad-just-able	–	–	3.8	-40	105	A	SOT-23-6	Detect and Release Delay Function VDD Pin Detection Type
U.D. NV3601 AEC	2.4(VDD) 0(SENSE)	6(VDD) 36(SENSE)	7(VDD) 42(SENSE)	OV:4.5 UV:3.3	OV:22.2 UV:19.8	-1.25 to 0.75	–	–	–	TBD	-40	125	P	SOT-23-5-DC	Window Voltage Detector
U.D. NV3600 AEC	2.4(VDD) 0(SENSE)	6(VDD) 36(SENSE)	7(VDD) 42(SENSE)	3.3	19.8	-1.25 to 0.75	–	–	–	TBD	-40	125	P	SOT-23-5-DC	-VDET & +VDET Indi-vidually set voltage, +VDET setting range: 4.5V to +22.2V
R3119xxxxE AEC ♡	2.1	6	7	2.3	12	-3 to 2	–	–	–	3.3	-40	105	J	SOT-23-5	SENSE Pin Detection Type

Part No.	Operating Voltage Range [V] min.	Operating Voltage Range [V] max.	Absolute Max. Ratings [V]	Detector Threshold Range [V] min.	Detector Threshold Range [V] max.	Detector Threshold Accuracy [%] Full Temp.	Release Delay Time	LDO	WDT	Supply Current [μA] typ.	Operating Temp. Range [℃] min.	Operating Temp. Range [℃] max.	Automotive Quality Class	Package	key Features
R3151xxxxE/F AEC ♡	3.6	6	7	5	10	± 2	Ad-just-able	–	–	3.5	-40	105	A	SOT-23-6	Detect and Release Delay Function SENSE Pin Detection Type
R5106 AEC ♡	0.9	6	7	1.5	5.5	-2.8 to 1.5	Ad-just-able	–	Yes	11	-40	125	A	SOT-23-6	Timeout WDT CD pin and CTW pin are combined.
R3116 AEC ♡	0.5	6	7	0.7	5	± 1.5	Ad-just-able	–	–	0.35	-40	105	A	DFN1212-4 SOT-23-5	
R3118 AEC ♡	1	6	7	0.6	5	± 2.5	Ad-just-able	–	–	0.4	-40	85	A	SOT-23-6	SENSE Pin Detection Type

LDD(Laser Diode Driver)

Part No.	Supply Voltage [V]	CH	Maximum Output Rate Per 1 Channel [Mdots/sec]	Rising/ Falling Time [ns]	Maximum Operating Current [mA] LD1	Maximum Operating Current [mA] LD2/3/4	Operating Temp. Range [℃] min.	Operating Temp. Range [℃] max.	Automotive Quality Class	Protection Function	Package	key Features
RN5C750 AEC	1.8 & 3.3	4CH	200	1.0	800	400	LD Over Current Detection LD Pin Short Circuit Detection PDI Current Error Detection Thermal Shutdown	-40	105	J	QFN0808-56	Wettable Flank

PMIC

Part No.	Number of Outputs	Configuration	Operating Voltage Range [V] min.	Operating Voltage Range [V] max.	Absolute Max. Ratings [V]	Output Current [A]	Output Voltage Range [V] min.	Output Voltage Range [V] max.	Reference Voltage / Output Voltage Accuracy [%] Room Temp.	Reference Voltage / Output Voltage Accuracy [%] Full Temp.	Oscillation Frequency [kHz] min.	Oscillation Frequency [kHz] max.	External Clock Synchronization	Operating Temp. Range [℃] min.	Operating Temp. Range [℃] max.	Automotive Quality Class	Package	key Features
NJW4750 AEC ♡	4	HV Buck	3.9	40	45	1.2	2.5	5.5	± 1.0	± 2.0	280	2400	Yes	-40	125	T1	EQFN26-HH	Ch3 Select-able Reg
		LV Buck	2.4	5.5	7.0	0.6	1.1	3.6										
		LV Buck	2.4	5.5	7.0	0.6	1.1	3.6										
		LV LDO	2.4	5.5	7.0	0.3	1.1	3.6					–					
U.D. NP8700 AEC	4	HV Buck	3.9	20	22	1.2	2.5	5.0	± 1.0	± 2.0	2000 (Fix)		Yes	-40	125	P	QFN3426-26-NC	SSFM
		LV Buck	2.4	5.5	7.0	1.0	0.8	3.3										
		LV Buck	2.4	5.5	7.0	1.0	0.8	3.3										
		LV LDO	2.4	5.5	7.0	0.3	0.8	3.3					–					
U.D. NJW4760 AEC	12	HV LDO	4.5	40	45	0.05	3.3(Fix)		± 1.5	TBD	400	2000	–	-40	125	T1	EQFN48-SN	OTP I²C Sequence Interface SSFM Digital Watchdog Timer
		HV LDO	4.5	40	45	0.05	1.8(Fix)											
		LV Buck	2.4	5.5	7.0	3.0	0.6	3.6					Yes					
		LV Buck	2.4	5.5	7.0	3.0	0.6	3.6										
		LV Buck	2.4	5.5	7.0	3.0	0.6	3.6										
		LV Buck	2.4	5.5	7.0	3.0	0.6	3.6										
		LV Buck	2.4	5.5	7.0	2.0	0.6	3.6										
		LV LDO	2.4	5.5	7.0	0.1	1.0	3.3					–					
		LV LDO	2.4	5.5	7.0	0.1	1.0	3.3										
		LV LDO	2.4	5.5	7.0	0.1	1.0	3.3										
		LV LDO	2.4	5.5	7.0	0.5	1.0	3.3										
		LV LDO	2.4	5.5	7.0	0.5	1.0	3.3										
RN5T569 AEC	11	LV Buck	2.7	5.5	6.0	3.0	0.6	3.5	–	± 2.0	2000 (Fix)		–	-40	105	A	QFN0707-48-P27	OTP I²C Sequence Interface Dynamic Voltage Scaling Watchdog Timer
		LV Buck	2.7	5.5	6.0	3.0	0.6	3.5	–	± 2.0								
		LV Buck	2.7	5.5	6.0	2.0	0.6	3.5	–	± 2.0								
		LV Buck	2.7	5.5	6.0	2.0	0.6	3.5	–	± 2.0								
		LV LDO	2.7	5.5	6.0	0.3	0.9	3.5	–	± 2.0	–		–					
		LV LDO	2.7	5.5	6.0	0.3	0.9	3.5	–	± 2.0								
		LV LDO	2.7	5.5	6.0	0.3	0.6	3.5	–	± 2.0								
		LV LDO	2.7	5.5	6.0	0.2	0.9	3.5	–	± 2.0								
		LV LDO	2.7	5.5	6.0	0.2	0.9	3.5	–	± 2.0								
		LV LDO	2.7	5.5	6.0	0.03	1.2	3.5	–	± 2.0								
		LV LDO	2.7	5.5	6.0	0.01	0.9	3.5	–	± 2.0								

Power Control Unit (PCU) | Battery Management System (BMS) | Electronic Power Steering(EPS) | Electric Compressor | DC/DC Converter | Smart Key System | Information | Entertainment | LED Headlight ECU | Camera Sensing (Collision Avoidance ASIS) | Camera Sensing (Parking Assist System) | Vehicle to Everything (V2X) | Corner Sensor ECU | Telematics/ e-Call | Acoustic Vehicle Alerting System (AVAS)

Power Supply

Switching Driver (Gate Driver)

Part No.	Supply Voltage [V]		Absolute Max. Ratings [V]	Output Current (Source) [A]	Output Current (Sink) [A]	Output Rise Time [nsec]	Output Fall Time [nsec]	Operating Temp. Range [℃]		Auto-motive Quality Class	Features	Function	Package
	min.	max.		typ.	typ.	typ.	typ.	min.	max.				
U.D. ND1433 AEC	4.0	45	50	0.002	–	–	–	-40	125	P	Built-in Charge Pump Power Supply anomaly detection (UVLO/OVP/Reverse Battery protection/Ground Loss protection) Back to Back configuration	High side Nch. Gate Drive	SSOP-16-BD

Audio ICs

Power Amplifiers

Part No.	Channel	Operating Voltage Range [V]		Output Power			Stand-by	Mute	Operating Temp. Range [℃]		Automotive Quality Class	Package
		min.	max.	Po	V+ [V]	RL [ohm]			min.	max.		
NJU7089	BTL:1ch.	1.8	5.5	1.2W typ.	5	8	Yes	Yes	-40	105	T	SSOP20-C3, MSOP8(VSP8), HTSSOP24-P1
NJU7089 AEC ♡	BTL:1ch.	1.8	5.5	1.2W typ.	5	8	Yes	Yes	-40	105	T	DFN8-V1(ESON8-V1)
NJU72060	BTL:1ch	2.7	5.5	500mW typ.	5	8	Yes	Yes	-40	105	T	MSOP8(VSP8), HSOP8-M1, DFN8-V1(ESON8-V1)

Class D Amplifiers

Part No.	Channel	Operating Voltage Range [V]		Output Power			Stand-by	Mute	Operating Temp. Range [℃]		Automo-tive Quali-ty Class	Package
		min.	max.	Po	V+ [V]	RL [ohm]			min.	max.		
NJU8759A	BTL:1ch.	1.8	5.5	3.0W typ.	5	4	Yes	Yes	-40	105	T	HSOP8-M1
U.D. NA1150	BTL:1ch.	2.6	5.5	1.2W typ.	5	8	Yes	Yes	-40	125	P	MSOP8(VSP8), DFN8-V1(ESON8-V1)

Motor IC

Part No.	Function	Operating Voltage Rangee [V]		Maximum Rating		Operating Temp. Range [℃]		Auto-motive Quality Class	Additional Function	Package
		min.	max.	Supply Voltage [V]	Output Current [mA]	min.	max.			
NJU7367B AEC	Single-phase DC Brush-less Motor Driver	2.0	5.5	7	1000	-40	125	T1	TSD, OCP, Lock Protection	MSOP8(TVSP8)

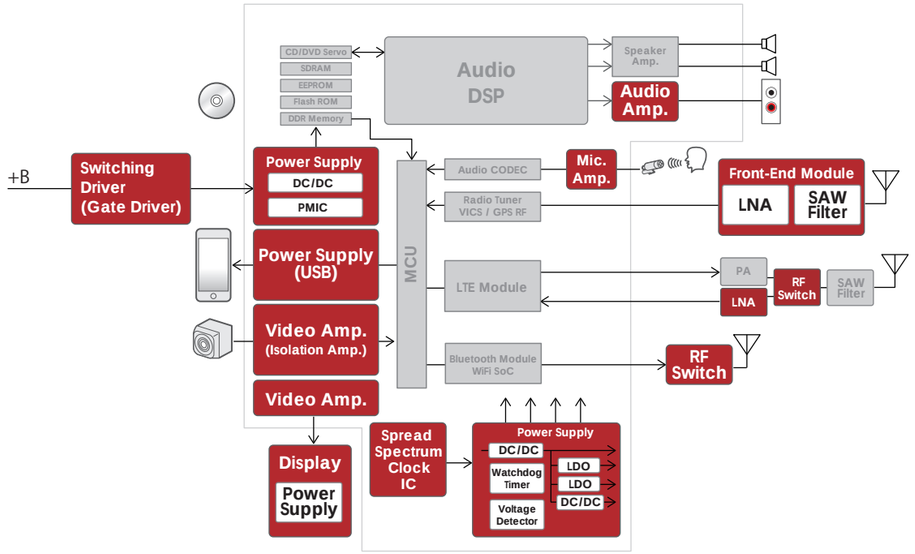

U.D. : Under development NEW : New product AEC : AEC-Q100 Compliant AEC : AEC-Q100 to be Compliant

♡ : Products available in PRODUCT LONGEVITY PROGRAM ♡xxxx : Products available in PRODUCT LONGEVITY PROGRAM with time limit

Operational Amplifier (Op-Amp.)

Part No.	No. of Cir-cuit	Power Supply	Supply Volt-age [V]		Characteristics						Operating Temp. Range [℃]		Auto-motive Quality Class	Package
					V_{IO} [mV]		I_{CC} [mA]		SR [V/μs]	en [nV/√Hz]				
			min.	max.	typ.	max.	typ.	max.	typ.	typ.	min.	max.		
MUSES8920	2	Dual	± 3.5	± 17	0.8	5	9	12	25	8	-40	125	–	DIP8, SOP8 JEDEC 150mil(EMP8), ESON8-X7
NJM8080	2	Dual	± 2	± 18	0.3	3	6	9	5	5	-40	125	–	SSOP8, SOP8, MSOP8(TVSP8)
NEW NJM8087	2	Dual	± 4	± 16	0.1	0.8	2.6	3	20	10	-40	125	–	SOP8 JEDEC 150mil(EMP8)
NJU77552 AEC	2	Single	2.2	5.5	1	6.5	0.1	0.122	0.8	24	-40	125	T1	MSOP8(VSP8)

Power Supply

- Automatic : Automatic Shift to ECO Mode
- Manual : Manual Shift to ECO Mode
- Peak : Peak Voltage, Duration time=200ms
- Thermal : Thermal Shutdown Circuit
- Ripple : Ripple Rejection, Frequency = 1kHz
- Discharge : Auto-discharge Function
- Reverse : Reverse Current Protection Circuit
- Constant : Constant Slope Circuit
- High Immunity : Enhanced Noise Immunity
- Inrush : Inrush Current Limit Circuit
- Diode : Diode Rectification
- Soft-Start : Soft-start Circuit
- UVLO : Undervoltage Lockout Circuit
- OVLO : Overvoltage Lockout Circuit
- OVP : Overvoltage Protection Circuit
- Phase : Phase Compensation
- SSCG : Spectrum Diffusion Type Oscillator
- PG : Power Good Function
- Sequencing : Start-up Sequencing Control

LDO Regulators

Part No.	Input Voltage Range [V]		Absolute Max. Ratings [V]	Output Cur-rent [mA]	Output Voltage Range*1 [V]		Output Voltage Accuracy [%]	Supply Cur-rent [μA]	Operating Temp. Range [℃]		Auto-motive Quality Class	Package	key Features
	min.	max.			min.	max.	Full Temp.	typ.	min.	max.			
R1560 AEC ♡	5.5	60	80	100	1.8	14	± 1.5	3	-40	125	A	HSOP-6J TO-252-5-P2	Peak : 90V Thermal
R5112 AEC ♡	3.5	42	50	200	1.8 VD B: 1.6 D: 2.9	5.0 VD B: 4.8 D: 4.8	± 1.6 VD: ± 1.6	3.8	-40	125	A	HSOP-8E	+VD(Voltage Detector) Peak : 60V Thermal
NJW4104 AEC	4.0	40	45	200	3.3	5.0	± 2.0	A ver.:5.5 B ver.:5.0	-40	125	T1	SOT-89-5-2 SOT-89-3	Ultra-low current consumption UVLO Thermal
NJW4107 AEC ♡	4.0	40	45	300	3.3	5.0	± 1.5	A ver.:75 B ver.:70	-40	125	T1	SOT-89-5-2 SOT-89-3	Fast Transient Response UVLO Thermal

*1 Please refer to the product data sheet for the output.

Power Supply

LDO Regulators

Part No.	Input Voltage Range [V] min.	Input Voltage Range [V] max.	Absolute Max. Ratings [V]	Output Current [mA]	Output Voltage Range*1 [V] min.	Output Voltage Range*1 [V] max.	Output Voltage Accuracy [%] Full Temp.	Supply Current [μA] typ.	Operating Temp. Range [℃] min.	Operating Temp. Range [℃] max.	Automotive Quality Class	Package	key Features
NJW4105 AEC	4.0	40	45	500	3.3	8.0	± 1.5	65	-40	125	T1	TO-252-5-L5	Fast Transient Response Output voltage accuracy includes regulation Thermal
NJW4106 AEC	4.0	40	45	500	2.5	16	VADJ ± 2.0	65	-40	125	T1	TO-252-5-L5	Fast Transient Response Adjustable Type Output voltage accuracy includes regulation Thermal
R1524 AEC ♡	3.5	36	50	200	1.8	12	± 1.6	2.2	-40	125	A	SOT-23-5 SOT-89-5 HSOP-6J HSOP-8E	Peak : 60V Thermal
U.D. NJM11100 AEC	2.1	18	20	240	1.3	17	Vref ± 2.5	200	-40	125	T1	SOT-23-6-1	Ripple : 75dB(f=1kHz) Adjustable Type With Noise Bypass Pin Thermal Reverse
RP171 AEC ♡	2.6	10	12	150	1.2	6	-3.5 to 3	23	-40	105	A	SOT-23-5	Ripple : 70dB Thermal Constant Discharge : Ver. D
RP170 AEC ♡	2.6	10	12	300	1.2	6	± 3.0	23	-40	105	A	SOT-23-5 SOT-89-5	Ripple : 70dB Thermal Constant Discharge : Ver. D
NJM2815	5.5	8.0	10	1500	5.1	5.15	± 1.0	980	-40	85	-	HSOP8-M1	Built-in Output Voltage Thermal
NJM2816	5.5	8.0	10	1800	5.1	5.15	± 1.0	1150	-40	85	-	HSOP8-M1	Built-in Output Voltage Thermal
RP130 AEC ♡	1.7	6.5	7	150	1.2	5	± 1.5	38	-40	105	A	DFN1212-4 SOT-23-5	Ripple : 80dB Discharge : Ver. D
NJM2879 AEC	2.3	6.5	7	200	5.1	5.0	± 2.0	150	-40	125	H	SOT-23-5	Discharge Thermal Reverse
NJM12884 AEC	2.3	6.5	7	500	5.1	5.0	± 2.0	200	-40	125	H	DFN8-WA (ESON8-WA)	Discharge Thermal Soft-Start Reverse
RP132 AEC ♡	1.4	6.5	7	1000	0.8(Fix) 0.8(Adj)	5(Fix) 5.5(Adj)	± 1.9(Fix) ± 29mV(Adj)	65	-40	105	A	SOT-89-5 HSOP-6J TO-252-5-P2	Ripple : 70dB Thermal Inrush Discharge : Ver. D
NEW NR1640 AEC ♡	2.7	5.5	6.5	200	2.5	4.8	± 1.5	350	-40	125	P	SOT-23-5-DC	Output noise : 6μVrms Ripple : 80dB(f=100kHz) Thermal Discharge
RP111 AEC ♡	1.4	5.25	6	500	0.7(Fix) 0.7(Adj)	3.4(Fix) 3.6(Adj)	± 1.5(Fix) ± 50mV(Adj)	80	-40	105	A	SOT-23-5 SOT-89-5 HSOP-6J	Load regulation: Typ. 1mV Load transient response accuracy:Typ. -75mV/+45mV, 1mA ⇔ 250mA (1/2 IOUT (Max.)) Ripple : 75dB Thermal Inrush Discharge : Ver. D

*1 Please refer to the product data sheet for the output.

DC/DC(Buck Converter/SW.REG.)

Part No.	Input Voltage Range [V] min.	Input Voltage Range [V] max.	Absolute Max. Ratings [V]	Output Current [mA]	Output Voltage Range [V] min.	Output Voltage Range [V] max.	SW. Device	Rectification	SW. Control	Oscillation Frequency [kHz] min.	Oscillation Frequency [kHz] max.	Maximum Duty [%]	External Clock Synchronization	Operating Temp. Range [℃] min.	Operating Temp. Range [℃] max.	Automotive Quality Class	Package	key Features
U.D. NC2905 AEC	4.0	75	80	1500	TBD	TBD	Built-in MOS-FET	Diode Rectification	PWM	100	2400	100	Yes	-40	125	P	HSOP-8-AC	Over Current Protection (Hiccup type) Thermal Soft-Start UVLO SSCG Phase : External PG

Part No.	Input Voltage Range [V] min.	Input Voltage Range [V] max.	Absolute Max. Ratings [V]	Output Current [mA]	Output Voltage Range [V] min.	Output Voltage Range [V] max.	SW. Device	Rectification	SW. Control	Oscillation Frequency [kHz] min.	Oscillation Frequency [kHz] max.	Maximum Duty [%]	External Clock Synchronization	Operating Temp. Range [℃] min.	Operating Temp. Range [℃] max.	Automotive Quality Class	Package	key Features
U.D. NJW4175 AEC	3.4	40	45	600	0.8	26	Built-in MOS-FET	Synchronous Rectification	PWM/ PFM	2100 (Fix)		100	Yes	-40	125	T1	HSOP8-M1	Light Load Mode Over Current Protection (Hiccup type) Soft-Start Phase : Internal PG
NJW4119	6.5	40	45	2400	5.1	5.185	Built-in MOS-FET	Diode Rectification	PWM	300 (Fix)		92	Yes	-40	125	-	HTS-SOP24-P1	For USB charger Over Current Protection (Hiccup type) Thermal Soft-Start UVLO PG Phase : External
NJW4171 AEC	3.4	40	45	2500	0.8	38	Built-in MOS-FET	Diode Rectification	PWM/ PFM(A) PWM(B)	100	2400	100	Yes	-40	125	T1	HSOP8-M1	Light Load Mode(A ver.) External Clock Synchronization Over Current Protection (Hiccup type) Thermal Soft-Start UVLO PG Phase : External
U.D. R1277 AEC	4.0	34	36	8000	0.7 (Adj)	5.3 (Adj)	Built-in MOS-FET	Synchronous Rectification	Forced PWM, PWM/ VFM	250	1000	–	Yes	-40	125	A	QFN0505-31	Over Current Protection : Latch-type or Hiccup-type Tracking function Soft-Start : External UVLO OVP Thermal PG SSCG : Ver. 03x/13x Phase : External
R1273 AEC	4.0	34	36	14000	0.7 (Adj)	5.3 (Adj)	Built-in MOS-FET	Synchronous Rectification	Forced PWM, PWM/ VFM	250	1000	–	Yes	-40	125	A	QFN0505-32B	Over Current Protection : Latch-type or Hiccup-type Tracking function Soft-Start : External UVLO OVP Thermal PG SSCG : Ver. 03x/13x Phase : External
R1272 AEC ♡	4.0	34	36	–	0.7 (Adj)	5.3 (Adj)	Controller	Synchronous Rectification	Forced PWM, PWM/ VFM	250	1000	–	Yes	-40	125	A	HSOP-18	Over Current Protection : Latch-type or Hiccup-type Tracking function Soft-Start : External UVLO OVP Thermal SSCG : Ver. 03x/ 13x PG Phase : External
R1270 AEC ♡	3.6	34	36	3000	0.8 (Adj)	31.6 (Adj)	Built-in MOS-FET	Diode Rectification	Forced PWM, PWM/ VFM	300	2400	–	Yes	-40	125	A	HSOP-18	Over Current Protection : Fold back-type , with Latch-type FLAG Output Function Soft-Start : External UVLO OVLO Thermal Phase : External
R1271 AEC ♡ 2030	3.6	30	42	1000	3.3,5.0 (Fix)		Built-in MOS-FET	Synchronous Rectification	Forced PWM	2000 (Fix)		–	–	-40	125	A	DFN3030-12B HSOP-18	Over Current Protection : Latch-type or Hiccup-type Soft-Start : External UVLO OVLO Thermal PG SSCG : Ver. xx1C/D

Power Supply

DC/DC(Buck Converter/SW.REG.)

Part No.	Input Voltage Range [V] min.	Input Voltage Range [V] max.	Absolute Max. Ratings [V]	Output Current [mA]	Output Voltage Range [V] min.	Output Voltage Range [V] max.	SW. Device	Rectification	SW. Control	Oscillation Frequency [kHz] min.	Oscillation Frequency [kHz] max.	Maximum Duty [%]	External Clock Synchronization	Operating Temp. Range [℃] min.	Operating Temp. Range [℃] max.	Automotive Quality Class	Package	key Features
R1278 AEC ♡ 2030	3.6	30	36	2000	3.3 (Adj)	5.0 (Adj)	Built-in MOS-FET	Synchronous Rectification	Forced PWM	1800	2200	–	Yes	-40	125	A	HSOP-18	Over Current Protection : Hiccup-type Tracking function Soft-Start : External UVLO OVLO Thermal PG SSCG : Ver. 003C Phase : External
R1276 AEC ♡ 2030	3.6	30	36	3000	0.7 (Adj)	6.5 (Adj)	Built-in MOS-FET	Synchronous Rectification	Forced PWM, PWM/VFM	250	1000	–	Yes	-40	125	A	HSOP-18	Over Current Protection : Hiccup-type Tracking function Soft-Start : External Adjustable UVLO OVLO Thermal PG SSCG : Ver. 00xC Phase : Externa
RP550 AEC ♡	2.3	4.5 or 5.5	6.5	1000 × 2ch.	0.6 (Adj)	3.3 (Adj)	Built-in MOS-FET	Synchronous Rectification	Forced PWM, PWM/VFM	2300 (Fix)		100	–	-40	105	A	DFN3030-12	2ch. Over Current Protection : Latch-type Soft-Start UVLO Thermal
RP506 AEC ♡	2.5	4.5 or 5.5	6.5	2000	0.8 (Fix) 0.6/0.8 (Adj)	3.3 (Fix) 4.0 (Adj)	Built-in MOS-FET	Synchronous Rectification	Forced PWM, PWM/VFM	1200 (Fix) 2300 (Fix)		100	–	-40	105	A	DFN3030-12	Over Current Protection : Latch-type Soft-Start : External Adjustable UVLO Thermal PG Discharge : Ver. H/L
RP510 AEC ♡	2.5	5.5	6.5	4000	0.8 (Fix/Adj)	3.3 (Fix/Adj)	Built-in MOS-FET	Synchronous Rectification	Forced PWM	2300 (Fix)		100	–	-40	105	A	DFN3030-12	Over Current Protection : Latch-type or Fold back-type Soft-Start : External Adjustable UVLO Thermal PG Discharge : Ver. H/N

DC/DC(Boost Converter/SW.REG.)

Part No.	Input Voltage Range [V] min.	Input Voltage Range [V] max.	Absolute Max. Ratings [V]	Output Current [A]	Output Voltage Range [V] min.	Output Voltage Range [V] max.	SW. Device	SW. Control	Oscillation Frequency [kHz] min.	Oscillation Frequency [kHz] max.	Maximum Duty [%]	External Clock Synchronization	Operating Temp. Range [℃] min.	Operating Temp. Range [℃] max.	Automotive Quality Class	Package	key Features
NJW4132 ♡	4.55	40	45	1.75	4.55	38	Built-in MOS-FET	PWM	2000 (Fix)		80	Yes	-40	125	T1	SOT-89-5-2	PWM, External Clock Synchronization Over Current Protection (Hiccup type) Thermal Soft-Start UVLO Phase
NJW4133 AEC	3.0	40	45	5.0	3.0	38	Built-in MOS-FET	PWM	100	2400	92	Yes	-40	125	T1	HSOP8-M1	Over Current Protection (Hiccup type) Thermal Soft-Start OVP UVLO
NJW4140 ♡	3.0	40	45	–	3.0	–	Controller	PWM	40	1000	85	–	-40	125	T1	MSOP8(VSP8)	Available for Fly-Back AEC=Z2 Pulse-by-pulse current limit circuit Soft-Start UVLO
NJW1871 AEC ♡	2.5	40	45	–	2.5	–	Controller	PWM	50	1000	87	Yes	-40	125	T1	MSOP10(VSP10)	5.2V Gate Drive Available for Fly-Back RUN function Over Current Protection (Hiccup type) Thermal Soft-Start UVLO OVP
NJW4142 AEC ♡	2.5	40	45	–	2.5	–	Controller	PWM	50	1000	87	Yes	-40	125	T1	MSOP10(VSP10)	5.2V Gate Drive Available for Fly-Back RUN function Over Current Protection (Hiccup type) Thermal Soft-Start UVLO OVP
U.D. NJW1871A AEC	4.5 (TBD)	40	45	–	4.5 (TBD)	–	Controller	PWM	1000	2000 (TBD)	(TBD)	Yes	-40	125	T1	MSOP10(VSP10)	5.2V Gate Drive Available for Fly-Back RUN function Over Current Protection (Hiccup type) Thermal Soft-Start UVLO OVP
R1294 AEC ♡	2	5.5	6.5	2	Up to 20 Adjustable		Built-in MOS-FET	PWM	210	1400	91	Yes	-40	105	A	QFN0404-24B	for LCD/CCD/OLED +CP : 1/4th operating frequency Sequencing UVLO Soft-Start : External

Clock IC with SSFM for Switching Regulator

Part No.	Operating Voltage Range [V] min.	Operating Voltage Range [V] max.	Absolute Max. Ratings [V]	Clock Frequency [kHz] min.	Clock Frequency [kHz] max.	Frequency Spreading [%] typ.	Frequency Spreading [%] max.	Operating Temp. Range [℃] min.	Operating Temp. Range [℃] max.	Automotive Quality Class	Package
U.D. NJW4203 AEC	2.7	5.5	7.0	120	2400	± 2.7	± 4.4	-40	125	T1	MSOP8(VSP8)

Voltage Detectors (VD), Watchdog Timers (WDT)

Part No.	Operating Voltage Range [V] min.	Operating Voltage Range [V] max.	Absolute Max. Ratings [V]	Detector Threshold Range [V] min.	Detector Threshold Range [V] max.	Detector Threshold Accuracy [%] Full Temp.	Release Delay Time	LDO	WDT	Supply Current [μA] typ.	Operating Temp. Range [℃] min.	Operating Temp. Range [℃] max.	Automotive Quality Class	Package	key Features
R5112 AEC ♡	3.5	42	50	B:1.6 D:2.9	B:4.8 D:4.8	± 1.6	Adjustable	Yes Io= 200mA	–	3.8	-40	125	A	HSOP-8E	Voltage Regulator with VD Peak : 60V Thermal
R3119xxxxA AEC ♡	1.2	36	50	2.3	12	-3 to 2	Adjustable	–	–	3.3	-40	105	J	SOT-23-5	
R3151xxxxA/B AEC ♡	1.4	36	50	5	10	± 2	Adjustable	–	–	3.8	-40	105	A	SOT-23-6	Detect and Release Delay Function VDD Pin Detection Type
U.D. NV3601 AEC	2.4(VDD) 0(SENSE)	6(VDD) 36(SENSE)	7(VDD) 42(SENSE)	OV:4.5 UV:3.3	OV:22.2 UV:19.8	-1.25 to 0.75	–	–	–	TBD	-40	125	P	SOT-23-5-DC	Window Voltage Detector
U.D. NV3600 AEC	2.4(VDD) 0(SENSE)	6(VDD) 36(SENSE)	7(VDD) 42(SENSE)	3.3	19.8	-1.25 to 0.75	–	–	–	TBD	-40	125	P	SOT-23-5-DC	-VDET & +VDET Individually set voltage, +VDET setting range: 4.5V to +22.2V
R3119xxxxE AEC ♡	2.1	6	7	2.3	12	-3 to 2	–	–	–	3.3	-40	105	J	SOT-23-5	SENSE Pin Detection Type
R3151xxxxE/F AEC ♡	3.6	6	7	5	10	± 2	Adjustable	–	–	3.5	-40	105	A	SOT-23-6	Detect and Release Delay Function SENSE Pin Detection Type
R5106 AEC ♡	0.9	6	7	1.5	5.5	-2.8 to 1.5	Adjustable	–	Yes	11	-40	125	A	SOT-23-6	Timeout WDT CD pin and CTW pin are combined.
R3116 AEC ♡	0.5	6	7	0.7	5	± 1.5	Adjustable	–	–	0.35	-40	105	A	DFN1212-4 SOT-23-5	
R3118 AEC ♡	1	6	7	0.6	5	± 2.5	Adjustable	–	–	0.4	-40	85	A	SOT-23-6	SENSE Pin Detection Type

Power Supply

PMIC

Part No.	Number of Outputs	Configuration	Operating Voltage Range [V] min.	Operating Voltage Range [V] max.	Absolute Max. Ratings [V]	Output Current [A]	Output Voltage Range [V] min.	Output Voltage Range [V] max.	Reference Voltage / Output Voltage Accuracy [%] Room Temp.	Reference Voltage / Output Voltage Accuracy [%] Full Temp.	Oscillation Frequency [kHz] min.	Oscillation Frequency [kHz] max.	External Clock Synchronization	Operating Temp. Range [℃] min.	Operating Temp. Range [℃] max.	Automotive Quality Class	Package	key Features
U.D. NJW4760 AEC	12	HV LDO	4.5	40	45	0.05	3.3(Fix)		± 1.5	TBD	400	2000	–	-40	125	T1	EQFN48-SN	OTP I²C Sequence Interface SSFM Digital Watchdog Timer
		HV LDO	4.5	40	45	0.05	1.8(Fix)											
		LV Buck	2.4	5.5	7.0	3.0	0.6	3.6					Yes					
		LV Buck	2.4	5.5	7.0	3.0	0.6	3.6										
		LV Buck	2.4	5.5	7.0	3.0	0.6	3.6										
		LV Buck	2.4	5.5	7.0	3.0	0.6	3.6										
		LV Buck	2.4	5.5	7.0	2.0	0.6	3.6										
		LV LDO	2.4	5.5	7.0	0.1	1.0	3.3										
		LV LDO	2.4	5.5	7.0	0.1	1.0	3.3					–					
		LV LDO	2.4	5.5	7.0	0.1	1.0	3.3										
		LV LDO	2.4	5.5	7.0	0.5	1.0	3.3										
		LV LDO	2.4	5.5	7.0	0.5	1.0	3.3										
RN5T569 AEC	11	LV Buck	2.7	5.5	6.0	3.0	0.6	3.5	–	± 2.0	2000 (Fix)		–	-40	105	A	QFN0707-48-P27	OTP I²C Sequence Interface Dynamic Voltage Scaling Watchdog Timer
		LV Buck	2.7	5.5	6.0	3.0	0.6	3.5	–	± 2.0								
		LV Buck	2.7	5.5	6.0	2.0	0.6	3.5	–	± 2.0								
		LV Buck	2.7	5.5	6.0	2.0	0.6	3.5	–	± 2.0								
		LV LDO	2.7	5.5	6.0	0.3	0.9	3.5	–	± 2.0	–		–					
		LV LDO	2.7	5.5	6.0	0.3	0.9	3.5	–	± 2.0								
		LV LDO	2.7	5.5	6.0	0.3	0.6	3.5	–	± 2.0								
		LV LDO	2.7	5.5	6.0	0.2	0.9	3.5	–	± 2.0								
		LV LDO	2.7	5.5	6.0	0.2	0.9	3.5	–	± 2.0								
		LV LDO	2.7	5.5	6.0	0.03	1.2	3.5	–	± 2.0								
		LV LDO	2.7	5.5	6.0	0.01	0.9	3.5	–	± 2.0								

Switching Drver (Gate Driver)

Part No.	Supply Voltage [V] min.	Supply Voltage [V] max.	Absolute Max. Ratings [V]	Output Current (Source) [A] typ.	Output Current (Sink)[A] typ.	Output Rise Time [nsec] typ.	Output Fall Time [nsec] typ.	Operating Temp. Range [℃] min.	Operating Temp. Range [℃] max.	Automotive Quality Class	Features	Function	Package
U.D. ND1433 AEC	4.0	45	50	0.002	–	–	–	-40	125	P	Built-in Charge Pump Power Supply anomaly detection (UVLO/OVP/Reverse Battery protection/Ground Loss protection) Back to Back configuration	High side Nch. Gate Drive	SSOP-16-BD

Switching Drver (High Side Switch/Low Side Switch)

Part No.	Absolute Max. Ratings [V] Drain-Source Voltage	Absolute Max. Ratings [V] Input Voltage	Drain-Source Voltage [V] max.	Supply Voltage Range [V] min.	Supply Voltage Range [V] max.	Input Voltage Range [V] min.	Input Voltage Range [V] max.	Quiescent Current [μA]	Input Current [μA]	Drain Current [A]	On-Resistance [Ω]	Operating Temp. Range [℃] min.	Operating Temp. Range [℃] max.	Automotive Quality Class	Function	Package
NJW4830 ♡	45	6.0	40	4.6	40	2.64	5.5	110	150	0.5	0.35	-40	125	T1	High Side Switch (P ch.)	SOT-89-5-2

Audio & Video ICs

Audio Amplifiers (Line Amplifiers)

Part No.	Channel	Operating Voltage Range [V] min.	Operating Voltage Range [V] max.	Output Voltage Vom	Output Voltage V+ [V]	Output Voltage RL [ohm]	Output Coupling Capacitor-less	Pop Noise Suppression Circuit	Mute	Operating Temp. Range [℃] min.	Operating Temp. Range [℃] max.	Automotive Quality Class	Package
NJU72015	2ch.	3	3.6	2.3Vrms typ.	3.3	10k	Yes	Yes	Yes	-40	85	–	SSOP14
NJU72040	2ch.	2.7	3.6	2.7Vrms typ.	3.3	32k	–	Yes	Yes	-40	85	–	SSOP14
NJW1240	6ch.	6	10	5Vrms min.	8	47k	Yes	Yes	Yes	-40	85	–	SSOP32

Audio Amplifiers (Microphone Amplifiers)

Part No.	Operating Voltage Range [V] min.	Operating Voltage Range [V] max.	Channel	Voltage Gain (※) [dB]	Sensitivity Adjust	2wire/ 3wire	Operating Temp. Range [℃] min.	Operating Temp. Range [℃] max.	Automotive Quality Class	Key Features	Package
NJU7907A	4.5	16	1ch.	+24 to +40	–	2wire	-40	85	–	Standard	MSOP10(TVSP10)
NJU72090	1.8	16	1ch.	+24 to +40	Yes	2wire	-40	105	–	FET for impedance converter, Fine Tune Sensitivity	MSOP10(TVSP10)
NJU72097	2.7	16	1ch.	+24 to +40	Yes	2wire	-40	105	–	Fine Tune Sensitivity Regulator for Mic. Capsule	MSOP10(TVSP10)

※ Set by enternal resistors.

Video Amplifiers

Part No.	Function	Operating Voltage Range [V] min.	Operating Voltage Range [V] max.	Channel	Clamp	Bias	75ohm Driver	LPF	Operating Temp. Range [℃] min.	Operating Temp. Range [℃] max.	Automotive Quality Class	Package
NEW NJM41001	Low Voltage Wide Band	3.0	7.0	1ch.	Yes	–	Yes	–	-40	105	T	SOT-23-6-1
NJM41005 AEC	Isolation Amplifier with Video Driver	4.5	5.5	1ch.	Yes	Yes	Yes	–	-40	105	T	SOT-23-5
NJU71091	1ch. Video Driver with Short to Battery Protection	2.65	3.45	6dBx1	–	Yes	Yes	6th order	-40	125	T1	DFN8-U1 (ESON8-U1)

RF Devices

RF Switches

Part No.	Function	P-0.2dB [dBm]	Insertion Loss [dB]	Isolation [dB]	Frequency Range [GHz]	Automotive Quality Class	Package Size [mm]
NJG1817ME4	SPDT	40@6.0GHz	0.35@3.85GHz 0.40@4.7GHz 0.45@6.0GHz	27@3.85GHz 27@4.7GHz 25@6.0GHz	0.3 to 6	–	2.0x2.0x0.397
NJG1669MD7	SPDT	37@0.9GHz 37@5.9GHz	0.3 @0.9GHz 0.45@5.9GHz	32@0.9GHz 25@5.9GHz	0.05 to 6	–	1.6x1.6x0.397
NJG1681MD7	SPDT	>36@0.9GHz >36@2.7GHz >36@5.9GHz	0.18@0.9GHz 0.23@2.7GHz 0.45@5.9GHz	45@0.9GHz 30@2.7GHz 20@5.9GHz	0.2 to 6	–	1.6x1.6x0.397
NJG1802K51	SPDT	>36@0.9GHz >36@2.7GHz >36@5.9GHz	0.18@0.9GHz 0.23@2.7GHz 0.45@5.9GHz	50@0.9GHz 30@2.7GHz 20@5.9GHz	0.2 to 6	–	2.0x2.0x0.375
NJG1814MD7	SPDT	>33@0.9GHz >36@2.7GHz >33@5.9GHz	0.35@0.9GHz 0.40@2.7GHz 0.45@5.9GHz	42@0.9GHz 34@2.7GHz 33@5.9GHz	0.2 to 6	–	1.6x1.6x0.397
NJG1801K75	SPDT	30@2.5GHz 30@5.9GHz	0.35@2.4 to 2.5GHz 0.45@4.9 to 5.9GHz	28@2.4 to 2.5GHz 30@4.9 to 5.9GHz	0.05 to 6	–	1.0x1.0x0.375
NJG1801AKGC-A NJG1801BKGC-A AEC	SPDT	30@2.5GHz 30@5.9GHz	0.35@2.4 to 2.5GHz 0.45@4.9 to 5.9GHz 0.6@8.5GHz	28@2.4 to 2.5GHz 27@4.9 to 5.9GHz 18@8.5GHz	0.05 to 8.5	A	1.6x1.6x0.78
NJG1806K75	SPDT	30@2.5GHz 30@5.9GHz	0.35@2.4 to 2.5GHz 0.40@4.9 to 5.9GHz	25@2.4 to 2.5GHz 25@4.9 to 5.9GHz	0.05 to 6	–	1.0x1.0x0.375
NJG1815K75	SPDT	30@2.5GHz 30@5.9GHz	0.45@2.4 to 2.5GHz 0.40@4.9 to 6GHz	25@2.4 to 2.5GHz 25@4.9 to 6GHz	1 to 6	–	1.0x1.0x0.375
NJG1815AK75-A AEC	SPDT	30@2.5GHz 30@5.9GHz	0.45@2.4 to 2.5GHz 0.40@4.9 to 6GHz	25@2.4 to 2.5GHz 25@4.9 to 6GHz	1 to 6	A	1.0x1.0x0.375
NJG1682MD7	SP3T	>36@0.9GHz >36@2.7GHz	0.22@0.9GHz 0.30@2.7GHz	35@0.9GHz 27@2.7GHz	0.2 to 3	–	1.6x1.6x0.397
NJG1804K64	SP3T	28@2.5GHz 27@5.9GHz	0.50@2.4 to 2.5GHz 0.60@4.9 to 5.9GHz	30@2.4 to 2.5GHz 26@4.9 to 5.9GHz	0.05 to 6	–	1.5x1.5x0.375
NJG1684ME2	SP4T	>36@0.9GHz >36@2.7GHz	0.25@0.9GHz 0.35@2.7GHz	37@0.9GHz 25@2.7GHz	0.2 to 3	–	1.8x1.8x0.397
NJG1809ME7	SP4T	>33@0.9GHz >33@2.7GHz >33@5.9GHz	0.35@0.9GHz 0.40@2.7GHz 0.50@5.9GHz	36@0.9GHz 27@2.7GHz 23@5.9GHz	0.2 to 6	–	2.0x2.0x0.397
NJG1812AMET-A AEC	DPDT	>36@0.9GHz >36@2.7GHz	0.25@0.9GHz 0.45@2.7GHz	25@0.9GHz 17@2.7GHz	0.2 to 3	A	2.0x2.0x0.78

(Note)Since they include products for general consumer use, please contact our sales office when you consider it.

RF Devices

LNAs (Low Noise Amplifiers)

Part No.	Applications	Frequency Range [MHz]	Operating Voltage [V]	Operating Current [mA]	Gain [dB]	NF [dB]	P-1dB [dBm]	IIP3 [dBm]	Automotive Quality Class	Package Size [mm]
NJG1144KA1	GNSS	1559 to 1606	2.85/1.8	3.5/1.8	21/18	0.65/0.85	-16.5 /-18.5	-2/-6	–	1.6x1.6x0.55
NJG1150UA2	GNSS	1559 to 1606	2.8/1.8	4.9/4.2	16	0.6	-7/-9	1/-1	–	1.0x1.0x0.37
NJG1155UX2	GNSS	1559 to 1606	2.8/1.8	3.5/3.1	19/18.5	0.75	-12.5/-16	-1.5/-5	–	1.1x0.7x0.37
NJG1187KG1	GNSS	1559 to 1610	3.3	8	34	0.6	-20	-17	–	1.6x1.6x0.397
		1164 to 1300	3.3	8	37	0.65	-21	-17		
NJG1169UX2	3G/ LTE	880	2.8/1.8	4.8/4.0	12.5/12	0.8	1/-2	0/-0.5	–	1.1x0.7x0.37
NJG1170UX2	3G/ LTE	2000	2.8/1.8	4.8/4.0	15/13.5	0.7/0.9	-8.5/-12	2/-2	–	1.1x0.7x0.37
		2500	2.8/1.8	4.8/4.0	14.5/13.5	0.8/1.1	-8/-11	3.5/-1.5		
NJG1173UX2	3G/ LTE	3500	2.8/1.8	5.0/3.5	13.5/12	1.0/1.3	-10/-12	5/0	–	1.1x0.7x0.37
NJG1182UX2	LTE/ WLAN	5500	2.8/1.8	5.0/3.5	15/14.5	1.1/1.4	-11/-13	2/-1	–	1.1x0.7x0.37

Front-End Modules

Part No.	Applications	Frequency Range [MHz]	Operating Voltage [V]	Operating Current [mA]	Gain [dB]	NF [dB]	Low Band Rejection [dBc]	High Band Rejection [dBc]	Auto-motive Quality Class	Package Size [mm]
NJG1159PHH-A AEC	GPS	1575	2.8/1.8	3.7/3.0	16.0/15.5	1.50/1.55	55	43	A	1.5x1.1x0.5
	GLONASS	1597 to 1606			16.5/16.0	1.65/1.70				
	BeiDou	1559 to 1591			16.0/15.5	1.70/1.75				
NJG1161PCD	GPS	1575	2.8/1.8	3.3/2.6	18.5/17.5	1.60/1.65	85	75	–	2.5x2.5x0.63
	GLONASS	1597 to 1606				1.70/1.75				

SAW Filters

Part No.	Applications	Center Frequency f0 [MHz]	Passband Width [MHz]	Automotive Quality Class	Package Size [mm]
NSNJ9200A	GPS+GLONASS+Beidou	1582.471	46	–	2.0x1.6x0.65
NSNJ9205	L2	1227.6	20	–	2.0x1.6x0.65
NSNJ9208	L6	1278.75	10	–	2.0x1.6x0.65

(Note)Since they include products for general consumer use, please contact our sales office when you consider it.

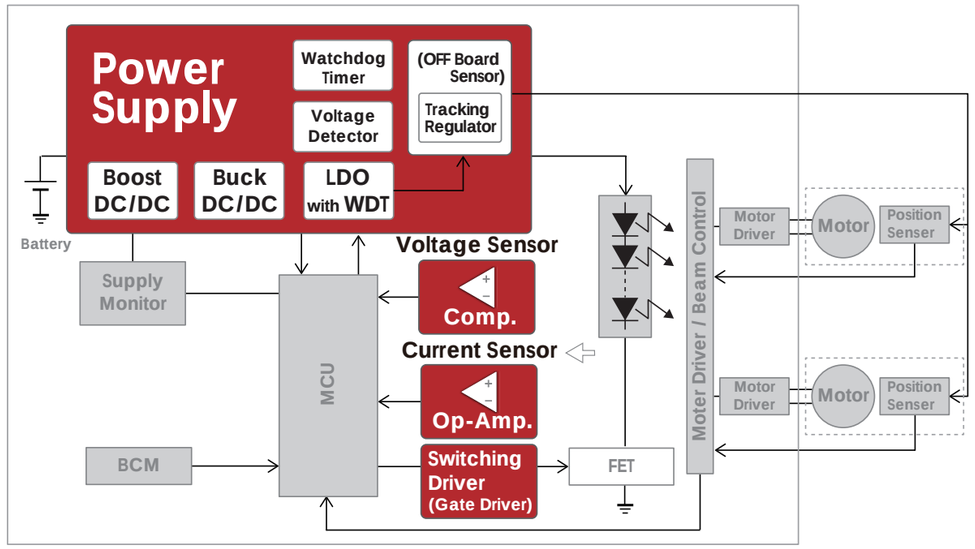

U.D. : Under development NEW : New product AEC : AEC-Q100 Compliant AEC : AEC-Q100 to be Compliant

♡ : Products available in PRODUCT LONGEVITY PROGRAM ♡xxxx : Products available in PRODUCT LONGEVITY PROGRAM with time limit

Operational Amplifier (Op-Amp.)

Part No.	No. of Circuit	Power Supply	Supply Voltage [V]		Characteristics					Operating Temp. Range [℃]		Automotive Quality Class	Package
					V_{IO} [mV]		I_{CC} [mA]		SR [V/μs]				
			min.	max.	typ.	max.	typ.	max.	typ.	min.	max.		
NJM2904B AEC	2	Single	3	36	2	4	0.7	2	0.3	-40	125	T1	MSOP8(VSP8)
NJM8532	2	Single	1.8	14	1	5	0.58	0.9	0.4	-40	125	T1	MSOP8(VSP8)
NJU7047 ♡	2	Single	2.7	5.5	0.9	5	2.7	4.5	9	-40	125	T1	MSOP8(TVSP8)
NJU7057 ♡	2	Single	1.8	5.5	0.8	4	0.52	0.84	0.8	-40	125	T1	MSOP8(TVSP8)
NJU77552 AEC	2	Single	2.2	5.5	1	6.5	0.1	0.122	0.8	-40	125	T1	MSOP8(VSP8)
NJU77701 ♡	1	Single	2.4	5.5	0.4	1.8	3.8	4.8	35	-40	125	T1	SOT-23-5

Comparator

Part No.	No. of Circuit	Power Supply	Supply Voltage [V]		Characteristics					Operating Temp. Range [℃]		Automotive Quality Class	Package
					V_{IO} [mV]		I_{CC} [mA]		Propagation Delay [μs]				
			min.	max.	typ.	max.	typ.	max.	typ.	min.	max.		
NJM2903 ♡	2	Single	2	36	2	14	0.4	2	1.5	-40	125	T1	MSOP8(VSP8)
NJU77242 ♡	2	Single	1.8	5.5	1	7	0.015	0.025	1.25	-40	125	T1	MSOP8(VSP8)

Power Supply

- **Automatic** : Automatic Shift to ECO Mode
- **Manual** : Manual Shift to ECO Mode
- **Peak** : Peak Voltage, Duration time=200ms
- **Thermal** : Thermal Shutdown Circuit
- **Ripple** : Ripple Rejection, Frequency = 1kHz
- **Discharge** : Auto-discharge Function
- **Reverse** : Reverse Current Protection Circuit
- **Constant** : Constant Slope Circuit
- **High Immunity** : Enhanced Noise Immunity
- **Inrush** : Inrush Current Limit Circuit
- **Diode** : Diode Rectification
- **Soft-Start** : Soft-start Circuit
- **UVLO** : Undervoltage Lockout Circuit
- **OVLO** : Overvoltage Lockout Circuit
- **OVP** : Overvoltage Protection Circuit
- **Phase** : Phase Compensation
- **SSCG** : Spectrum Diffusion Type Oscillator
- **PG** : Power Good Function
- **Sequencing** : Start-up Sequencing Control

LDO Regulators

Part No.	Input Voltage Range [V]		Absolute Max. Ratings [V]	Output Current [mA]	Output Voltage Range*1 [V]		Output Voltage Accuracy [%]	Supply Current [μA]	Operating Temp. Range [℃]		Automotive Quality Class	Package	key Features
	min.	max.			min.	max.	Full Temp.	typ.	min.	max.			
R1525 AEC ♡	3.5	42	50	200	1.8	12	± 1.6	2.2	-40	125	K	SOT-23-5 SOT-89-5 HSOP-6J HSOP-8E	Peak : 60V Thermal High Immunity
R5112 AEC ♡	3.5	42	50	200	1.8 VD B: 1.6 D: 2.9	5.0 VD B: 4.8 D: 4.8	± 1.6 VD: ± 1.6	3.8	-40	125	K	HSOP-8E	+VD(Voltage Detector) Peak : 60V Thermal
R5114 AEC ♡	3.5	42	50	250	3.3 VD: 2.5	5.0 VD: 4.8	± 1.6 VD: ± 1.6	8.5	-40	125	K	HSOP-8E HSOP-18 HQFN0808-28	Timeout WDT Peak : 60V Thermal
R5115 AEC ♡	3.5	42	50	250	3.3 VD: 2.5	5.0 VD: 4.8	± 1.6 VD: ± 1.6	8.5	-40	125	K	HSOP-8E HSOP-18 HQFN0808-28	Window WDT Peak : 60V Thermal
R1526 AEC ♡	3.5	42	50	300	1.8	9	± 1.6	32	-40	125	K	HSOP-8E	Peak : 60V Ripple : 50dB(f=100Hz) Thermal High Immunity
R5116 AEC ♡	3.5	42	50	500	3.3 UV: 2.5 OV: 3.3	5.0 UV: 5.0 OV: 5.5	-1.25 to 0.75 UV: -1.25 to 0.75 OV: -1.25 to 0.75	25	-40	125	K	HSOP-8E HQFN0808-28	Built-in Window VD Released Hysteresis: 0.7% (Max.) Peak : 60V Thermal
R5117 AEC ♡	3.5	42	50	500	3.3 SVD: 2.5 BVD: 3.5	5.0 SVD: 5.0 BVD: 12.0	-1.25 to 0.75 SVD:-1.25 to 0.75 BVD:-2.0 to 1.0	35	-40	125	K	HSOP-8E HQFN0808-28	Built-in Dual VD SVD Released Hysteresis: 0.7% (Max.) BVD Released Hysteresis: 5.0% (Max.) Peak : 60V Thermal
NJW4104 AEC	4.0	40	45	200	3.3	5.0	± 2.0	A ver.:5.5 B ver.:5.0	-40	125	T1	SOT-89-5-2 SOT-89-3	Ultra-low current consumption UVLO Thermal
NJW4107 AEC ♡	4.0	40	45	300	3.3	5.0	± 1.5	A ver.:75 B ver.:70	-40	125	T1	SOT-89-5-2 SOT-89-3	Fast Transient Response UVLO Thermal
NJW4105 AEC	4.0	40	45	500	3.3	8.0	± 1.5	65	-40	125	T1	TO-252-5-L5	Fast Transient Response Output voltage accuracy includes regulation Thermal
NJW4106 AEC	4.0	40	45	500	2.5	16	VADJ ± 2.0	65	-40	125	T1	TO-252-5-L5	Fast Transient Response Adjustable Type Output voltage accuracy includes regulation Thermal
U.D. NP4271 AEC	4.0	40	45	500	3.3	5.0	± 2.0	120	-40	125	P	HSOP-8-AC	WDT, Window VD
R1524 AEC ♡	3.5	36	50	200	1.8	12	± 1.6	2.2	-40	125	K	SOT-23-5 SOT-89-5 HSOP-6J HSOP-8E	Peak : 60V Thermal
R1517 AEC ♡	3.5	36	50	500	2.5(Fix) 2.5(Adj)	9(Fix) 20(Adj)	± 1.8(Fix) ± 45mV(Adj)	18	-40	125	K	HSOP-6J TO-252-5-P2	Constant : Constant : External Adjustable Ver. E/F Peak : 60V Thermal Discharge : Ver. D/F
R5110 AEC ♡	3.5	36	50	500	1.8 VD: 1.6	5.0 VD: 5.5	± 1.5 VD: ± 1.8	25	-40	125	K	HSOP-8E HSOP-18 HQFN0808-28	Timeout or Window WDT Peak : 60V Thermal Inrush

Part No.	Input Voltage Range [V]		Absolute Max. Ratings [V]	Output Current [mA]	Output Voltage Range*1 [V]		Output Voltage Accuracy [%]	Supply Current [μA]	Operating Temp. Range [℃]		Automotive Quality Class	Package	key Features
	min.	max.			min.	max.	Full Temp.	typ.	min.	max.			
R1518 AEC ♡	3.5	36	50	1000	2.5(Fix) 2.5(Adj)	9(Fix) 20(Adj)	± 1.8(Fix) ± 45mV(Adj)	18	-40	125	K	HSOP-6J TO-252-5-P2	Constant : External Adjustable Peak : 60V Thermal Discharge : Ver. D/F
U.D. NJM11100 AEC	2.1	18	20	240	1.3	17	Vref ± 2.5	200	-40	125	T1	SOT-23-6-1	Ripple : 75dB(f=1kHz) Adjustable Type With Noise Bypass Pin Thermal Reverse
RP170 AEC ♡	2.6	10	12	300	1.2	6	± 3.0	23	-40	125	K	SOT-23-5 SOT-89-5	Ripple : 70dB Thermal Constant Discharge : Ver. D
NJM2879 AEC	2.3	6.5	7	200	5.1	5.0	± 2.0	150	-40	125	H	SOT-23-5	Discharge Thermal Reverse
NJM12884 AEC	2.3	6.5	7	500	5.1	5.0	± 2.0	200	-40	125	H	DFN8-WA (ESON8-WA)	Discharge Thermal Soft-Start Reverse
RP132 AEC ♡	1.4	6.5	7	1000	0.8(Fix) 0.8(Adj)	5(Fix) 5.5(Adj)	± 1.9(Fix) ± 29mV(Adj)	65	-40	105	J	SOT-89-5 HSOP-6J TO-252-5-P2	Ripple : 70dB Thermal Inrush Discharge : Ver. D
NEW NR1640 AEC ♡	2.7	5.5	6.5	200	2.5	4.8	± 1.5	350	-40	125	P	SOT-23-5-DC	Output noise : 6μVrms Ripple : 80dB(f=100kHz) Thermal Discharge
RP111 AEC ♡	1.4	5.25	6	500	0.7(Fix) 0.7(Adj)	3.4(Fix) 3.6(Adj)	± 1.5(Fix) ± 50mV(Adj)	80	-40	105	J	SOT-23-5 SOT-89-5 HSOP-6J	Load regulation: Typ. 1mV Load transient response accuracy:Typ. -75mV/+45mV, 1mA ⇔ 250mA (1/2 IOUT (Max.)) Ripple : 75dB Thermal Inrush Discharge : Ver. D

*1 Please refer to the product data sheet for the output.

Tracking Regulators

Part No.	Operating Voltage Range [V]		Absolute Max. Ratings [V]	Output Current [mA]	Output Voltage Range[V]		Output Voltage Accuracy [mV]	Supply Current [μA]	Operating Temp. Range[℃]		Automotive Quality Class	Package	key Features
	min.	max.			min.	max.	Full Temp.	typ.	min.	max.			
R1540 AEC ♡	3.5	42	50	70	2.2	14	± 15	60	-40	125	K	SOT-23-5 HSOP-8E	Foldback Protection Circuit Ripple : 80dB (f=100Hz) Thermal High Immunity
U.D. NR4250 AEC	4	40	45	50	2.5	36	± 10	40	-40	125	P	SOT-23-5-DC	Overcurrent Protection Ripple : 80dB (f=100Hz) Thermal High Immunity
U.D. NR4254 AEC	4	40	45	70	2.5	36	± 5	40	-40	125	P	SOT-89-5-DF	Output Voltage Accuracy: at VADJ/EN=5V Overcurrent Protection Ripple : 80dB (f=100Hz) Thermal High Immunity
U.D. NR4252 AEC	4	40	45	250	1.5	36	± 10	45	-40	125	P	SOT-89-5-DF	Overcurrent Protection Ripple : 80dB (f=100Hz) Thermal High Immunity

DC/DC(Buck Converter/SW.REG.)

Part No.	Input Voltage Range [V]		Absolute Max. Ratings [V]	Output Current [mA]	Output Voltage Range [V]		SW. Device	Rectification	SW. Control	Oscillation Frequency [kHz]		Maximum Duty [%]	External Clock Synchronization	Operating Temp. Range [℃]		Automotive Quality Class	Package	key Features
	min.	max.			min.	max.				min.	max.			min.	max.			
U.D. NC2905 AEC	4.0	75	80	1500	TBD	TBD	Built-in MOS-FET	Diode Rectification	PWM	100	2400	100	Yes	-40	125	P	HSOP-8-AC	Over Current Protection (Hiccup type) Thermal Soft-Start UVLO SSCG Phase : External PG

Power Supply

DC/DC(Buck Converter/SW.REG.)

Part No.	Input Voltage Range [V] min.	Input Voltage Range [V] max.	Absolute Max. Ratings [V]	Output Current [mA]	Output Voltage Range [V] min.	Output Voltage Range [V] max.	SW. Device	Rectification	SW. Control	Oscillation Frequency [kHz] min.	Oscillation Frequency [kHz] max.	Maximum Duty [%]	External Clock Synchronization	Operating Temp. Range [℃] min.	Operating Temp. Range [℃] max.	Automotive Quality Class	Package	key Features
NEW R1260 AEC ♡	5.0	60	80	–	1 (Adj)	16 (Adj)	Controller	Synchronous Rectification	Forced PWM, PWM/VFM	150	600	–	Yes	-40	125	K	HSOP-18	Over Current Protection : Latch-type or Hiccup-type Tracking function Soft-Start : External UVLO OVLO Thermal SSCG : Ver. xxxB/D PG Phase : External
U.D. NJW4175 AEC	3.4	40	45	600	0.8	26	Built-in MOSFET	Synchronous Rectification	PWM/PFM	2100(Fix)		100	Yes	-40	125	T1	HSOP8-M1	Light Load Mode Over Current Protection (Hiccup type) Soft-Start PG Phase : Internal
NJW4171 AEC	3.4	40	45	2500	0.8	38	Built-in MOSFET	Diode Rectification	PWM/PFM(A) PWM(B)	100	2400	100	Yes	-40	125	T1	HSOP8-M1	Light Load Mode(A ver.) External Clock Synchronization Over Current Protection (Hiccup type) Thermal Soft-Start UVLO Phase : External PG
R1271 AEC ♡ 2030	3.6	30	42	1000	3.3,5.0 (Fix)		Built-in MOSFET	Synchronous Rectification	Forced PWM	2000 (Fix)		–	–	-40	125	K	DFN3030-12B HSOP-18	Over Current Protection : Latch-type or Hiccup-type Soft-Start : External UVLO OVLO Thermal SSCG : Ver. xx1C/D PG
R1278 AEC ♡ 2030	3.6	30	36	2000	3.3 (Adj)	5.0 (Adj)	Built-in MOSFET	Synchronous Rectification	Forced PWM	1800	2200	–	Yes	-40	125	K	HSOP-18	Over Current Protection : Hiccup-type Tracking function Soft-Start : HSOP-1 UVLO OVLO Thermal SSCG : Ver. 003C PG Phase : External
R1276 AEC ♡ 2030	3.6	30	36	3000	0.7 (Adj)	6.5 (Adj)	Built-in MOSFET	Synchronous Rectification	Forced PWM, PWM/VFM	250	1000	–	Yes	-40	125	K	HSOP-18	Over Current Protection : Hiccup-type Tracking function Soft-Start : External UVLO OVLO Thermal SSCG : Ver. 00xC PG Phase : External

DC/DC (Boost Converter/SW.REG.)

Part No.	Input Voltage Range [V] min.	Input Voltage Range [V] max.	Absolute Max. Ratings [V]	Output Current [A]	Output Voltage Range [V] min.	Output Voltage Range [V] max.	SW. Device	SW. Control	Oscillation Frequency [kHz] min.	Oscillation Frequency [kHz] max.	Maximum Duty [%]	External Clock Synchronization	Operating Temp. Range [℃] min.	Operating Temp. Range [℃] max.	Automotive Quality Class	Package	key Features
NJW4132 ♡	4.55	40	45	1.75	4.55	38	Built-in MOSFET	PWM	2000 (Fix)		80	Yes	-40	125	T1	SOT-89-5-2	PWM, External Clock Synchronization Over Current Protection (Hiccup type) Thermal Soft-Start UVLO Phase
NJW4133 AEC	3.0	40	45	5.0	3.0	38	Built-in MOSFET	PWM	100	2400	92	Yes	-40	125	T1	HSOP8-M1	Over Current Protection (Hiccup type) Thermal Soft-Start OVP UVLO
NJW4140 ♡	3.0	40	45	–	3.0	–	Controller	PWM	40	1000	85	–	-40	125	T1	MSOP8 (VSP8)	Available for Fly-Back AEC=Z2 Pulse-by-pulse current limit circuit Soft-Start UVLO
NJW1871 AEC ♡	2.5	40	45	–	2.5	–	Controller	PWM	50	1000	87	Yes	-40	125	T1	MSOP10 (VSP10)	5.2V Gate Drive Available for Fly-Back RUN function Over Current Protection (Hiccup type) Thermal Soft-Start UVLO OVP

Part No.	Input Voltage Range [V] min.	Input Voltage Range [V] max.	Absolute Max. Ratings [V]	Output Current [A]	Output Voltage Range [V] min.	Output Voltage Range [V] max.	SW. Device	SW. Control	Oscillation Frequency [kHz] min.	Oscillation Frequency [kHz] max.	Maximum Duty [%]	External Clock Synchronization	Operating Temp. Range [℃] min.	Operating Temp. Range [℃] max.	Automotive Quality Class	Package	key Features
NJW4142 AEC ♡	2.5	40	45	–	2.5	–	Controller	PWM	50	1000	87	Yes	-40	125	T1	MSOP10 (VSP10)	10V Gate Drive Available for Fly-Back RUN function Over Current Protection (Hiccup type) Thermal Soft-Start UVLO OVP
U.D. NJW1871A AEC	4.5 (TBD)	40	45	–	4.5 (TBD)	–	Controller	PWM	1000	2000 (TBD)	(TBD)	Yes	-40	125	T1	MSOP10 (VSP10)	5.2V Gate Drive Available for Fly-Back RUN function Over Current Protection (Hiccup type) Thermal Soft-Start UVLO OVP

Voltage Detectors (VD), Watchdog Timers (WDT)

Part No.	Operating Voltage Range [V] min.	Operating Voltage Range [V] max.	Absolute Max. Ratings [V]	Detector Threshold Range [V] min.	Detector Threshold Range [V] max.	Detector Threshold Accuracy [%] Full Temp.	Release Delay Time	LDO	WDT	Supply Current [μA] typ.	Operating Temp. Range [℃] min.	Operating Temp. Range [℃] max.	Automotive Quality Class	Package	key Features
R5117 AEC ♡	3.5	42	50	BVD:3.5 SVD:2.5	BVD:12 SVD:5.0	BVD:-2 to 1 SVD:-1.25 to 0.75	Adjustable	Yes Io=500mA	–	35	-40	125	K	HSOP-8E HQFN0808-28	Voltage Regulator with Battery Voltage Detector Peak : 60V Thermal
R3152 AEC ♡	3.0	42	50	OV:1.1 UV:1.0	OV:5.9 UV:4.8	-1.25 to 0.75	Adjustable	–	–	1.5	-40	125	K	SOT-23-6	Window Voltage Detector SENSE Pin Detection
R5116 AEC ♡	3.5	42	50	OV:3.3 UV:2.5	OV:5.5 UV:5.0	-1.25 to 0.75	Adjustable	Yes Io=500mA	–	25	-40	125	K	HSOP-8E HQFN0808-28	Voltage Regulator with Window Voltage Detector Peak : 60V Thermal
R5112 AEC ♡	3.5	42	50	B:1.6 D:2.9	B:4.8 D:4.8	± 1.6	Adjustable	Yes Io=200mA	–	3.8	-40	125	A	HSOP-8E	Voltage Regulator with VD Peak : 60V Thermal
R5114 AEC ♡	3.5	42	50	2.5	4.8	± 1.6	Adjustable	Yes Io=250mA	Yes	8.5	-40	125	K	HSOP-8E HSOP-18 HQFN0808-28	Timeout WDT Peak : 60V Thermal
R5115 AEC ♡	3.5	42	50	2.5	4.8	± 1.6	Adjustable	Yes Io=250mA	Yes	8.5	-40	125	K	HSOP-8E HSOP-18 HQFN0808-28	Window WDT Peak : 60V Thermal
R3154 AEC ♡	3.0	42	50	OV:0.75 UV:0.55	OV:3.7 UV:3.3	-1.25 to 0.75	Adjustable	–	–	2	-40	125	R	SOT-23-6	Applicable to failure diagnosis Window Voltage Detector SENSE Pin Detection Type
U.D. NP4271 AEC	4.0	40	45	4.6 4.1	5.6	Low: ± 2.0 High: ± 5.0	Adjustable	Yes Io=500mA	Yes	120	-40	125	P	HSOP-8-AC	Window Voltage Detector
R3121xxxxA AEC ♡	1.4	36	50	3	12	-2.2 to 2.5	Adjustable	–	–	3.8	-40	125	K	SOT-23-6	VDD Pin Detection Type
R5110 AEC ♡	3.5	36	50	1.6	5.5	± 1.8	Adjustable	Yes Io=500mA	Yes	25	-40	125	K	HSOP-8E HSOP-18 HQFN0808-28	Timeout or Window WDT Peak : 60V Thermal Inrush
R3121xxxxE AEC ♡	2.4	6	7	3	12	-2.2 to 2.5	Adjustable	–	–	3.5	-40	125	K	SOT-23-6	SENSE Pin Detection Type
R3118 AEC ♡	1	6	7	0.6	5	± 2.5	Adjustable	–	–	0.4	-40	125	K	SOT-23-6	SENSE Pin Detection Type

Switching Drivers (Gate Drivers)

Part No.	Supply Voltage [V] min.	Supply Voltage [V] max.	Absolute Max. Ratings [V]	Output Current (Source) [A] typ.	Output Current (Sink) [A] typ.	Output Rise Time [nsec] typ.	Output Fall Time [nsec] typ.	Operating Temp. Range [℃] min.	Operating Temp. Range [℃] max.	Automotive Quality Class	Features	Function	Package
NJW4841 ♡	4.0	20	40	2.0	2.0	25	20	-40	125	T1	Built-in Thermal Shut Down Under Voltage Lockout	Low side Nch. Gate Drive	MSOP8(VSP8)
NJW4868	4.0	5.5	7.0	1.3	1.3	10	10	-40	125	T1	Built-in Current and Voltage detection circuit Built-in Voltage detection resistors	Low side Nch. Gate Drive	MSOP8(VSP8)

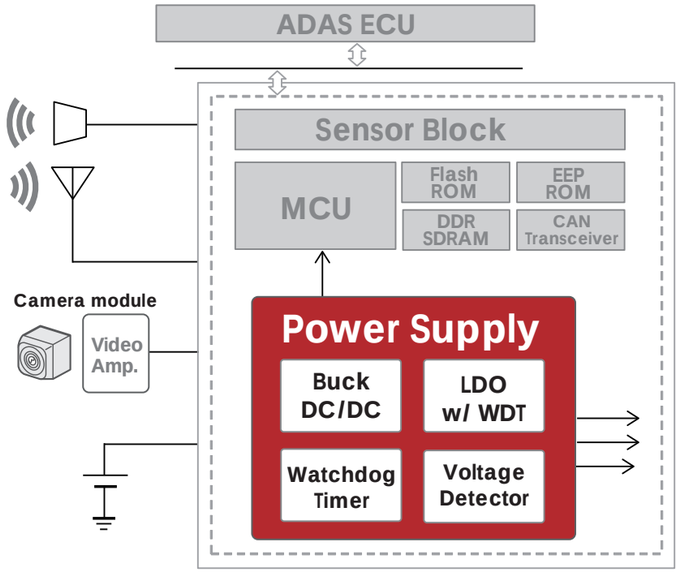

*ADAS: Advanced Driving Assistant System

U.D. : Under development NEW : New product AEC : AEC-Q100 Compliant AEC : AEC-Q100 to be Compliant

♡ : Products available in PRODUCT LONGEVITY PROGRAM ♡ xxxx : Products available in PRODUCT LONGEVITY PROGRAM with time limit

Power Supply

- Automatic : Automatic Shift to ECO Mode
- Manual : Manual Shift to ECO Mode
- Peak : Peak Voltage, Duration time=200ms
- Thermal : Thermal Shutdown Circuit
- Ripple : Ripple Rejection, Frequency = 1kHz
- Discharge : Auto-discharge Function
- Reverse : Reverse Current Protection Circuit
- Constant : Constant Slope Circuit
- High Immunity : Enhanced Noise Immunity
- Inrush : Inrush Current Limit Circuit
- Diode : Diode Rectification
- Soft-Start : Soft-start Circuit
- UVLO : Undervoltage Lockout Circuit
- OVLO : Overvoltage Lockout Circuit
- OVP : Overvoltage Protection Circuit
- Phase : Phase Compensation
- SSCG : Spectrum Diffusion Type Oscillator
- PG : Power Good Function
- Sequencing : Start-up Sequencing Control

LDO Regulators

Part No.	Input Voltage Range [V] min.	Input Voltage Range [V] max.	Absolute Max. Ratings [V]	Output Current [mA]	Output Voltage Range*1 [V] min.	Output Voltage Range*1 [V] max.	Output Voltage Accuracy [%] Full Temp.	Supply Current [μA] typ.	Operating Temp. Range [℃] min.	Operating Temp. Range [℃] max.	Automotive Quality Class	Package	key Features
R1525 AEC ♡	3.5	42	50	200	1.8	12	± 1.6	2.2	-40	125	K/A	SOT-23-5 SOT-89-5 HSOP-6J HSOP-8E	Peak : 60V Thermal High Immunity
R5112 AEC ♡	3.5	42	50	200	1.8 VD B: 1.6 D: 2.9	5.0 VD B: 4.8 D: 4.8	± 1.6 VD: ± 1.6	3.8	-40	125	K/A	HSOP-8E	+VD(Voltage Detector) Peak : 60V Thermal
R5114 AEC ♡	3.5	42	50	250	3.3 VD: 2.5	5.0 VD: 4.8	± 1.6 VD: ± 1.6	8.5	-40	125	K/A	HSOP-8E HSOP-18 HQFN0808-28	Timeout WDT Peak : 60V Thermal
R5115 AEC ♡	3.5	42	50	250	3.3 VD: 2.5	5.0 VD: 4.8	± 1.6 VD: ± 1.6	8.5	-40	125	K/A	HSOP-8E HSOP-18 HQFN0808-28	Window WDT Peak : 60V Thermal
R1526 AEC ♡	3.5	42	50	300	1.8	9	± 1.6	32	-40	125	K/A	HSOP-8E	Peak : 60V Ripple : 50dB(f=100Hz) Thermal High Immunity

Part No.	Input Voltage Range [V] min.	Input Voltage Range [V] max.	Absolute Max. Ratings [V]	Output Current [mA]	Output Voltage Range*1 [V] min.	Output Voltage Range*1 [V] max.	Output Voltage Accuracy [%] Full Temp.	Supply Current [μA] typ.	Operating Temp. Range [℃] min.	Operating Temp. Range [℃] max.	Automotive Quality Class	Package	key Features
R5116 AEC ♡	3.5	42	50	500	3.3 UV: 2.5 OV: 3.3	5.0 UV: 5.0 OV: 5.5	-1.25 to 0.75 UV: -1.25 to 0.75 OV: -1.25 to 0.75	25	-40	125	K/A	HSOP-8E HQFN0808-28	Built-in Window VD Released Hysteresis: 0.7% (Max.) Peak : 60V Thermal
R5117 AEC ♡	3.5	42	50	500	3.3 SVD: 2.5 BVD: 3.5	5.0 SVD: 5.0 BVD: 12.0	-1.25 to 0.75 SVD:-1.25 to 0.75 BVD:-2.0 to 1.0	35	-40	125	K/A	HSOP-8E HQFN0808-28	Built-in Dual VD SVD Released Hysteresis: 0.7% (Max.) BVD Released Hysteresis: 5.0% (Max.) Peak : 60V Thermal
NJW4182 AEC	4.0	40	45	100	3.3	5.0	± 3.0	9	-40	125	H	SOT-23-5	Ultra-low current consumption Thermal
U.D. NP4271 AEC	4.0	40	45	500	3.3	5.0	± 2.0	120	-40	125	P	HSOP-8-AC	WDT, Window VD
R1524 AEC ♡	3.5	36	50	200	1.8	12	± 1.6	2.2	-40	125	K/A	SOT-23-5 SOT-89-5 HSOP-6J HSOP-8E	Peak : 60V Thermal
R5111 AEC ♡	3.5	36	50	300	1.8 VD: 1.6	5.0 VD: 5.5	± 1.5 VD: ± 1.8	25	-40	125	K/A	HSOP-8E HSOP-18 HQFN0808-28	Timeout or Window WDT Peak : 60V Thermal Inrush
R1517 AEC ♡	3.5	36	50	500	2.5(Fix) 2.5(Adj)	9(Fix) 20(Adj)	± 1.8(Fix) ± 45mV(Adj)	18	-40	125	K/A	HSOP-6J TO-252-5-P2	Constant : External Adjustable Ver. E/F Peak : 60V Thermal Discharge : Ver. D/F
R5110 AEC ♡	3.5	36	50	500	1.8 VD: 1.6	5.0 VD: 5.5	± 1.5 VD: ± 1.8	25	-40	125	K/A	HSOP-8E HSOP-18 HQFN0808-28	Timeout or Window WDT Peak : 60V Thermal Inrush
R1518 AEC ♡	3.5	36	50	1000	2.5(Fix) 2.5(Adj)	9(Fix) 20(Adj)	± 1.8(Fix) ± 45mV(Adj)	18	-40	125	K/A	HSOP-6J TO-252-5-P2	Constant : External Adjustable Ver. E/F Peak : 60V Thermal Discharge : Ver. D/F
RP170 AEC ♡	2.6	10	12	300	1.2	6	± 3.0	23	-40	A:105 K:125	K/A	SOT-23-5 SOT-89-5	Ripple : 70dB Thermal Constant Discharge : Ver. D
NJM2879 AEC	2.3	6.5	7	200	5.1	5.0	± 2.0	150	-40	125	H	SOT-23-5	Discharge Thermal Reverse
NJM12884 AEC	2.3	6.5	7	500	5.1	5.0	± 2.0	200	-40	125	H	DFN8-WA (ESON8-WA)	Discharge Thermal Soft-Start Reverse
RP132 AEC ♡	1.4	6.5	7	1000	0.8(Fix) 0.8(Adj)	5(Fix) 5.5(Adj)	± 1.9(Fix) ± 29mV(Adj)	65	-40	105	J/A	SOT-89-5 HSOP-6J TO-252-5-P2	Ripple : 70dB Thermal Inrush Discharge : Ver. D
NEW NR1640 AEC ♡	2.7	5.5	6.5	200	2.5	4.8	± 1.5	350	-40	125	Q/P	SOT-23-5-DC	Outout noise : 6μVrms Ripple : 80dB(f=100kHz) Thermal Discharge
RP154 AEC ♡	1.4	5.25	6	300	0.8	3.7	± 3.0	50	-40	105	A	DFN2020-8 SOT-23-6	2ch. Ripple : 75dB Discharge : Ver. B
RP111 AEC ♡	1.4	5.25	6	500	0.7(Fix) 0.7(Adj)	3.4(Fix) 3.6(Adj)	± 1.5(Fix) ± 50mV(Adj)	80	-40	105	J/A	SOT-23-5 SOT-89-5 HSOP-6J	Load regulation: Typ. 1mV Load transient response accuracy: Typ. -75mV/+45mV, 1mA ⇔ 250mA (1/2 IOUT (Max.)) Ripple : 75dB Thermal Inrush Discharge : Ver. D

*1 Please refer to the product data sheet for the output voltage.

Power Supply

DC/DC(Buck Converter/SW.REG.)

Part No.	Input Voltage Range [V]		Absolute Max. Ratings [V]	Output Current [mA]	Output Voltage Range [V]		SW. Device	Rectification	SW. Control	Oscillation Frequency [kHz]		Maximum Duty [%]	External Clock Synchronization	Operating Temp. Range [℃]		Automotive Quality Class	Package	key Features
	min.	max.			min.	max.				min.	max.			min.	max.			
U.D. R1277 AEC	4.0	34	36	8000	0.7 (Adj)	5.3 (Adj)	Built-in MOS-FET	Synchronous Rectification	Forced PWM, PWM/ VFM	250	1000	–	Yes	-40	125	K/A	QFN0505-31	Over Current Protection : Latch-type or Hiccup-type Tracking function Soft-Start : External Adjustable UVLO OVP Thermal SSCG : Ver. 03x/13x PG Phase : External
R1273 AEC	4.0	34	36	14000	0.7 (Adj)	5.3 (Adj)	Built-in MOS-FET	Synchronous Rectification	Forced PWM, PWM/ VFM	250	1000	–	Yes	-40	125	A	QFN0505-32B	Over Current Protection : Latch-type or Hiccup-type Tracking function Soft-Start : External Adjustable UVLO PG OVP Thermal SSCG : Ver. 03x/ 13x Phase : External
R1272 AEC ♡	4.0	34	36	–	0.7 (Adj)	5.3 (Adj)	Controller	Synchronous Rectification	Forced PWM, PWM/ VFM	250	1000	–	Yes	-40	125	K/A	HSOP-18	Over Current Protection : Latch-type or Hiccup-type Tracking function Soft-Start : External Adjustable UVLO OVP Thermal SSCG : Ver. 03x/ 13x PG Phase : External
R1271 AEC ♡ 2030	3.6	30	42	1000	3.3,5.0 (Fix)		Built-in MOS-FET	Synchronous Rectification	Forced PWM	2000 (Fix)		–	–	-40	125	K/A	DFN3030-12B HSOP-18	Over Current Protection : Latch-type or Hiccup-type Soft-Start : External Adjustable UVLO OVLO Thermal SSCG : Ver. xx1C/D PG
R1245 AEC ♡	4.5	30	32	1200	0.8 (Adj)	27.3 (Adj)	Built-in MOS-FET	Diode Rectification	PWM	A/B:330 (Fix) C/D:500 (Fix) E/F:1000 (Fix) G/H:2400 (Fix)		–	–	-40	105	J/A	HSOP-8E DFN2020-8	Over Current Protection : Latch-type or Hiccup-type Soft-Start UVLO Thermal
RP550 AEC ♡	2.3	4.5 or 5.5	6.5	1000 × 2ch.	0.6 (Adj)	3.3 (Adj)	Built-in MOS-FET	Synchronous Rectification	Forced PWM, PWM/ VFM	2300 (Fix)		100	–	-40	105	A	DFN3030-12	2ch. Over Current Protection : Latch-type Soft-Start UVLO Thermal
RP506 AEC ♡	2.5	4.5 or 5.5	6.5	2000	0.8 (Fix) 0.6/0.8 (Adj)	3.3 (Fix) 4.0 (Adj)	Built-in MOS-FET	Synchronous Rectification	Forced PWM, PWM/ VFM	1200 (Fix) 2300 (Fix)		100	–	-40	A:105 K:125	K/A	DFN3030-12	Over Current Protection : Latch-type Soft-Start : External Adjustable UVLO Thermal PG Discharge : Ver. H/L

Voltage Detectors (VD), Watchdog Timers (WDT)

Part No.	Operating Voltage Range [V]		Absolute Max. Ratings [V]	Detector Threshold Range [V]		Detector Threshold Accuracy [%]	Release Delay Time	LDO	WDT	Supply Current [μA]	Operating Temp. Range [℃]		Automotive Quality Class	Package	key Features
	min.	max.		min.	max.	Full Temp.				typ.	min.	max.			
R5117 AEC ♡	3.5	42	50	BVD:3.5 SVD:2.5	BVD:12 SVD:5.0	BVD:-2 to 1 SVD:-1.25 to 0.75	Adjustable	Yes Io= 500mA	–	35	-40	125	K/A	HSOP-8E HQFN0808-28	Voltage Regulator with Battery Voltage Detector Peak : 60V Thermal
R3152 AEC ♡	3.0	42	50	OV:1.1 UV:1.0	OV:5.9 UV:4.8	-1.25 to 0.75	Adjustable	–	–	1.5	-40	125	K/A	SOT-23-6	Window Voltage Detector SENSE Pin Detection
R5116 AEC ♡	3.5	42	50	OV:3.3 UV:2.5	OV:5.5 UV:5.0	-1.25 to 0.75	Adjustable	Yes Io= 500mA	–	25	-40	125	K/A	HSOP-8E HQFN0808-28	Voltage Regulator with Window Voltage Detector Peak : 60V Thermal
R5112 AEC ♡	3.5	42	50	B:1.6 D:2.9	B:4.8 D:4.8	± 1.6	Adjustable	Yes Io= 200mA	–	3.8	-40	125	K/A	HSOP-8E	Voltage Regulator with VD Peak : 60V Thermal
R5114 AEC ♡	3.5	42	50	2.5	4.8	± 1.6	Adjustable	Yes Io= 250mA	Yes	8.5	-40	125	K/A	HSOP-8E HSOP-18 HQFN0808-28	Timeout WDT Peak : 60V Thermal
R5115 AEC ♡	3.5	42	50	2.5	4.8	± 1.6	Adjustable	Yes Io= 250mA	Yes	8.5	-40	125	K/A	HSOP-8E HSOP-18 HQFN0808-28	Window WDT Peak : 60V Thermal
R3154 AEC ♡	3.0	42	50	OV:0.75 UV:0.55	OV:3.7 UV:3.3	-1.25 to 0.75	Adjustable	–	–	2	-40	125	K/A	SOT-23-6	Applicable to failure diagnosis Window Voltage Detector SENSE Pin Detection Type
U.D. NP4271 AEC	4.0	40	45	4.6 4.1	5.6	Low: ± 2.0 High: ± 5.0	Adjustable	Yes Io= 500mA	Yes	120	-40	125	P	HSOP-8-AC	Window Voltage Detector
R3121xxxxA AEC ♡	1.4	36	50	3	12	-2.2 to 2.5	Adjustable	–	–	3.8	-40	125	K/A	SOT-23-6	VDD Pin Detection Type
R5110 AEC ♡	3.5	36	50	1.6	5.5	± 1.8	Adjustable	Yes Io= 500mA	Yes	25	-40	125	K/A	HSOP-8E HSOP-18 HQFN0808-28	Timeout or Window WDT Peak : 60V Thermal Inrush
R5111 AEC ♡	3.5	36	50	1.6	5.5	± 1.8	Adjustable	Yes Io= 300mA	Yes	25	-40	125	K/A	HSOP-8E HSOP-18 HQFN0808-28	Timeout or Window WDT Peak : 60V Thermal Inrush
R3121xxxxE AEC ♡	2.4	6	7	3	12	-2.2 to 2.5	Adjustable	–	–	3.5	-40	125	K/A	SOT-23-6	SENSE Pin Detection Typ

Camera Sensing (Parking Assist System)

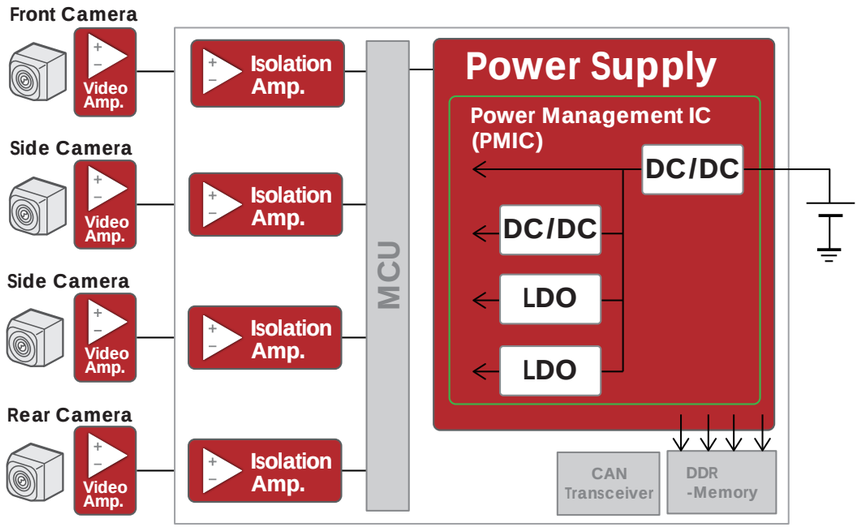

U.D. : Under development NEW : New product AEC : AEC-Q100 Compliant AEC : AEC-Q100 to be Compliant

♡ : Products available in PRODUCT LONGEVITY PROGRAM ♡ xxxx : Products available in PRODUCT LONGEVITY PROGRAM with time limit

Power Supply

PMIC

Part No.	Number of Outputs	Configuration	Operating Voltage Range [V] min.	Operating Voltage Range [V] max.	Absolute Max. Ratings [V]	Output Current [A]	Output Voltage Range [V] min.	Output Voltage Range [V] max.	Reference Voltage / Output Voltage Accuracy [%] Room Temp.	Reference Voltage / Output Voltage Accuracy [%] Full Temp.	Oscillation Frequency [kHz] min.	Oscillation Frequency [kHz] max.	External Clock Synchronization	Operating Temp. Range [℃] min.	Operating Temp. Range [℃] max.	Automotive Quality Class	Package	key Features
NJW4750 AEC ♡	4	HV Buck	3.9	40	45	1.2	2.5	5.5	± 1.0	± 2.0	280	2400	Yes	-40	125	T1	EQFN26-HH	Ch3 Selectable Reg
		LV Buck	2.4	5.5	7.0	0.6	1.1	3.6										
		LV Buck	2.4	5.5	7.0	0.6	1.1	3.6										
		LV LDO	2.4	5.5	7.0	0.3	1.1	3.6					–					
U.D. NP8700 AEC	4	HV Buck	3.9	20	22	1.2	2.5	5.0	± 1.0	± 2.0	2000 (Fix)		Yes	-40	125	P	QFN3426-26-NC	SSFM
		LV Buck	2.4	5.5	7.0	1.0	0.8	3.3										
		LV Buck	2.4	5.5	7.0	1.0	0.8	3.3										
		LV LDO	2.4	5.5	7.0	0.3	0.8	3.3					–					
U.D. RN5T5611 AEC	3	LV Buck	3.0	5.5	6.5	1.0	1.0	3.3	–	± 1.0	2300 (Fix)		–	-40	125	K	QFN0505-32-P7 (Wettable Flank)	I²C Sequence Interface 4ch. Window Voltage Ditector Analog Built-In Self Test Logic Built-In Self Test
		LV Buck	3.0	5.5	6.5	1.0	1.0	3.3	–	± 1.0								
		LV LDO	3.0	5.5	6.5	0.2	2.5	3.3	–	± 1.0	–		–					

Video ICs

Video Amplifiers

Part No.	Function	Operating Voltage Range [V] min.	Operating Voltage Range [V] max.	Channel	Clamp	Bias	75ohm Driver	LPF	Operating Temp. Range [℃] min.	Operating Temp. Range [℃] max.	Automotive Quality Class	Package
NJM41005 AEC	Isolation Amplifier with Video Driver	4.5	5.5	1ch.	Yes	Yes	Yes	–	-40	105	T	SOT-23-5
NJU71091	1ch. Video Driver with Short to Battery Protection	2.65	3.45	6dBx1	–	Yes	Yes	6th order	-40	125	T1	DFN8-U1(ESON8-U1)
NJU71094	Differential Output Video Driver with Short to Battery Protection	2.65	3.45	6dBx2	–	Yes	Yes	6th order	-40	125	T1	DFN8-W2(ESON8-W2)

Vehicle to Everything (V2X)

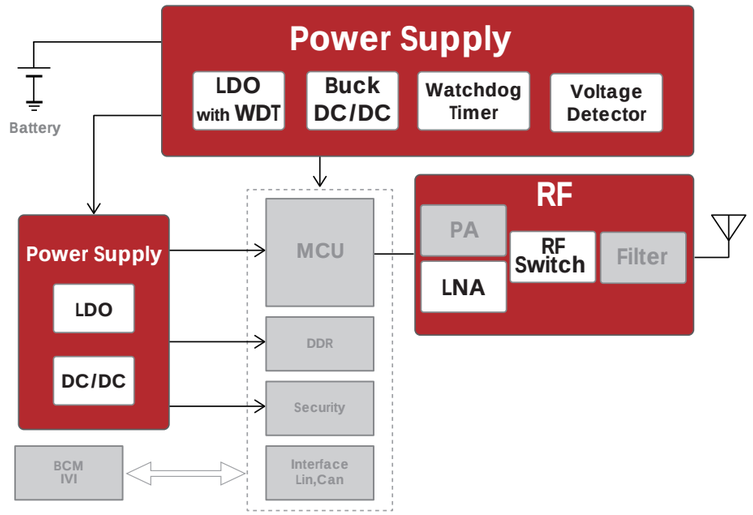

U.D. : Under development NEW : New product AEC : AEC-Q100 Compliant AEC : AEC-Q100 to be Compliant

♡ : Products available in PRODUCT LONGEVITY PROGRAM ♡ xxxx : Products available in PRODUCT LONGEVITY PROGRAM with time limit

RF Devices

RF Switches

Part No.	Function	P-0.2dB [dBm]	Insertion Loss [dB]	Isolation [dB]	Frequency Range [GHz]	Automotive Quality Class	Package Size [mm]
NJG1817ME4	SPDT	40@6.0GHz	0.35@3.85GHz 0.40@4.7GHz 0.45@6.0GHz	27@3.85GHz 27@4.7GHz 25@6.0GHz	0.3 to 6	–	2.0x2.0x0.397
NJG1669MD7	SPDT	37@0.9GHz 37@5.9GHz	0.3 @0.9GHz 0.45@5.9GHz	32@0.9GHz 25@5.9GHz	0.05 to 6	–	1.6x1.6x0.397
NJG1814MD7	SPDT	>33@0.9GHz >36@2.7GHz >33@5.9GHz	0.35@0.9GHz 0.40@2.7GHz 0.45@5.9GHz	42@0.9GHz 34@2.7GHz 33@5.9GHz	0.2 to 6	–	1.6x1.6x0.397

LNAs (Low Noise Amplifiers)

Part No.	Applications	Frequency Range [MHz]	Operating Voltage [V]	Operating Current [mA]	Gain [dB]	NF [dB]	P-1dB [dBm]	IIP3 [dBm]	Automotive Quality Class	Package Size [mm]
NJG1175KG1	LTE/ WLAN	4900 to 5950	3.3	13	16	0.95	-5	9	–	1.6x1.6x0.397

(Note)Since they include products for general consumer use, please contact our sales office when you consider it.

Power Supply

- Automatic : Automatic Shift to ECO Mode
- Manual : Manual Shift to ECO Mode
- Peak : Peak Voltage, Duration time=200ms
- Thermal : Thermal Shutdown Circuit
- Ripple : Ripple Rejection, Frequency = 1kHz
- Discharge : Auto-discharge Function
- Reverse : Reverse Current Protection Circuit
- Constant : Constant Slope Circuit
- High Immunity : Enhanced Noise Immunity
- Inrush : Inrush Current Limit Circuit
- Diode : Diode Rectification
- Soft-Start : Soft-start Circuit
- UVLO : Undervoltage Lockout Circuit
- OVLO : Overvoltage Lockout Circuit
- OVP : Overvoltage Protection Circuit
- Phase : Phase Compensation
- SSCG : Spectrum Diffusion Type Oscillator
- PG : Power Good Function
- Sequencing : Start-up Sequencing Control

LDO Regulators

Part No.	Input Voltage Range [V] min.	Input Voltage Range [V] max.	Absolute Max. Ratings [V]	Output Current [mA]	Output Voltage Range*1 [V] min.	Output Voltage Range*1 [V] max.	Output Voltage Accuracy [%] Full Temp.	Supply Current [μA] typ.	Operating Temp. Range [℃] min.	Operating Temp. Range [℃] max.	Automotive Quality Class	Package	key Features
R1525 AEC ♡	3.5	42	50	200	1.8	12	± 1.6	2.2	-40	125	A	SOT-23-5 SOT-89-5 HSOP-6J HSOP-8E	Peak : 60V Thermal High Immunity

*1 Please refer to the product data sheet for the output voltage.

Power Supply

LDO Regulators

Part No.	Input Voltage Range [V] min.	Input Voltage Range [V] max.	Absolute Max. Ratings [V]	Output Current [mA]	Output Voltage Range*1 [V] min.	Output Voltage Range*1 [V] max.	Output Voltage Accuracy [%] Full Temp.	Supply Current [μA] typ.	Operating Temp. Range [℃] min.	Operating Temp. Range [℃] max.	Automotive Quality Class	Package	key Features
R5112 AEC ♡	3.5	42	50	200	1.8 VD B: 1.6 D: 2.9	5.0 VD B: 4.8 D: 4.8	± 1.6 VD: ± 1.6	3.8	-40	125	A	HSOP-8E	+VD(Voltage Detector) Peak : 60V Thermal
R5114 AEC ♡	3.5	42	50	250	3.3 VD: 2.5	5.0 VD: 4.8	± 1.6 VD: ± 1.6	8.5	-40	125	A	HSOP-8E HSOP-18 HQFN0808-28	Timeout WDT Peak : 60V Thermal
R5115 AEC ♡	3.5	42	50	250	3.3 VD: 2.5	5.0 VD: 4.8	± 1.6 VD: ± 1.6	8.5	-40	125	A	HSOP-8E HSOP-18 HQFN0808-28	Window WDT Peak : 60V Thermal
R1526 AEC ♡	3.5	42	50	300	1.8	9	± 1.6	32	-40	125	A	HSOP-8E	Peak : 60V Ripple : 50dB(f=100Hz) Thermal High Immunity
R5116 AEC ♡	3.5	42	50	500	3.3 UV: 2.5 OV: 3.3	5.0 UV: 5.0 OV: 5.5	-1.25 to 0.75 UV: -1.25 to 0.75 OV: -1.25 to 0.75	25	-40	125	A	HSOP-8E HQFN0808-28	Built-in Window VD Released Hysteresis: 0.7% (Max.) Peak : 60V Thermal
R5117 AEC ♡	3.5	42	50	500	3.3 SVD: 2.5 BVD: 3.5	5.0 SVD: 5.0 BVD:12.0	-1.25 to 0.75 SVD:-1.25 to 0.75 BVD:-2.0 to 1.0	35	-40	125	A	HSOP-8E HQFN0808-28	Built-in Dual VD SVD Released Hysteresis: 0.7% (Max.) BVD Released Hysteresis: 5.0% (Max.) Peak : 60V Thermal
NJW4104 AEC	4.0	40	45	200	3.3	5.0	± 2.0	A ver.:5.5 B ver.:5.0	-40	125	T1	SOT-89-5-2 SOT-89-3	Ultra-low current consumption UVLO Thermal
NJW4107 AEC ♡	4.0	40	45	300	3.3	5.0	± 1.5	A ver.:75 B ver.:70	-40	125	T1	SOT-89-5-2 SOT-89-3	Fast Transient Response UVLO Thermal
NJW4105 AEC	4.0	40	45	500	3.3	8.0	± 1.5	65	-40	125	T1	TO-252-5-L5	Fast Transient Response Output voltage accuracy includes regulation Thermal
NJW4106 AEC	4.0	40	45	500	2.5	16	VADJ ± 2.0	65	-40	125	T1	TO-252-5-L5	Fast Transient Response Adjustable Type Output voltage accuracy includes regulation Thermal
U.D. NP4271 AEC	4.0	40	45	500	3.3	5.0	± 2.0	120	-40	125	P	HSOP-8-AC	WDT, Window VD
R1524 AEC ♡	3.5	36	50	200	1.8	12	± 1.6	2.2	-40	125	A	SOT-23-5 SOT-89-5 HSOP-6J HSOP-8E	Peak : 60V Thermal
R5111 AEC ♡	3.5	36	50	300	1.8 VD: 1.6	5.0 VD: 5.5	± 1.5 VD: ± 1.8	25	-40	125	A	HSOP-8E HSOP-18 HQFN0808-28	Timeout or Window WDT Peak : 60V Thermal Inrush
R5110 AEC ♡	3.5	36	50	500	1.8 VD: 1.6	5.0 VD: 5.5	± 1.5 VD: ± 1.8	25	-40	125	A	HSOP-8E HSOP-18 HQFN0808-28	Timeout or Window WDT Peak : 60V Thermal Inrush
U.D. NJM11100 AEC	2.1	18	20	240	1.3	17	Vref ± 2.5	200	-40	125	T1	SOT-23-6-1	Ripple : 75dB(f=1kHz) Adjustable Type With Noise Bypass Pin Thermal Reverse
RP130 AEC ♡	1.7	6.5	7	150	1.2	5	± 1.5	38	-40	105	A	DFN1212-4 SOT-23-5	Ripple : 80dB Discharge : Ver. D
NJM2879 AEC	2.3	6.5	7	200	5.1	5.0	± 2.0	150	-40	125	H	SOT-23-5	Discharge Thermal Reverse

Part No.	Input Voltage Range [V] min.	Input Voltage Range [V] max.	Absolute Max. Ratings [V]	Output Current [mA]	Output Voltage Range*1 [V] min.	Output Voltage Range*1 [V] max.	Output Voltage Accuracy [%] Full Temp.	Supply Current [μA] typ.	Operating Temp. Range [℃] min.	Operating Temp. Range [℃] max.	Automotive Quality Class	Package	key Features
NJM12884 AEC	2.3	6.5	7	500	5.1	5.0	± 2.0	200	-40	125	H	DFN8-WA (ESON8-WA)	Discharge Thermal Soft-Start Reverse
NEW NR1640 AEC ♡	2.7	5.5	6.5	200	2.5	4.8	± 1.5	350	-40	125	P	SOT-23-5-DC	Outout noise : 6μVrms Ripple : 80dB(f=100kHz) Thermal Discharge
RP154 AEC ♡	1.4	5.25	6	300	0.8	3.7	± 3.0	50	-40	105	A	DFN2020-8 SOT-23-6	2ch. Ripple : 75dB Discharge : Ver. B
RP108 AEC ♡	1.6	5.25	6	3000	0.8(Fix) 0.8(Adj)	3.3(Fix) 4.2(Adj)	-3 to 2.4	350	-40	105	A	TO-252-5-P2	Thermal Reverse Constant Discharge : Ver. D/F

*1 Please refer to the product data sheet for the output voltage.

DC/DC(Buck Converter/SW.REG.)

Part No.	Input Voltage Range [V] min.	Input Voltage Range [V] max.	Absolute Max. Ratings [V]	Output Current [mA]	Output Voltage Range [V] min.	Output Voltage Range [V] max.	SW. Device	Rectification	SW. Control	Oscillation Frequency [kHz] min.	Oscillation Frequency [kHz] max.	Maximum Duty [%]	External Clock Synchronization	Operating Temp. Range [℃] min.	Operating Temp. Range [℃] max.	Automotive Quality Class	Package	key Features
U.D. NC2905 AEC	4.0	75	80	1500	TBD	TBD	Built-in MOS-FET	Diode Rectification	PWM	100	2400	100	Yes	-40	125	P	HSOP-8-AC	Over Current Protection (Hiccup type) Thermal Soft-Start UVLO SSCG Phase : External PG
U.D. NJW4175 AEC	3.4	40	45	600	0.8	26	Built-in MOS-FET	Synchronous Rectification	PWM/ PFM	2100(Fix)		100	Yes	-40	125	T1	HSOP8-M1	Light Load Mode Over Current Protection (Hiccup type) Soft-Start PG Phase : Internal
NJW4171 AEC	3.4	40	45	2500	0.8	38	Built-in MOS-FET	Diode Rectification	PWM/ PFM(A) PWM(B)	100	2400	100	Yes	-40	125	T1	HSOP8-M1	Light Load Mode(A ver.) External Clock Synchronization Over Current Protection (Hiccup type) Thermal Soft-Start UVLO PG Phase : External
R1270 AEC ♡	3.6	34	36	3000	0.8 (Adj)	31.6 (Adj)	Built-in MOS-FET	Diode Rectification	Forced PWM, PWM/ VFM	300	2400	–	Yes	-40	125	A	HSOP-18	Over Current Protection : Fold back-type, with Latch-type FLAG Output Function Soft-Start : External Adjustable UVLO OVLO Thermal Phase : External
U.D. R1277 AEC	4.0	34	36	8000	0.7 (Adj)	5.3 (Adj)	Built-in MOS-FET	Synchronous Rectification	Forced PWM, PWM/ VFM	250	1000	–	Yes	-40	125	A	QFN0505-31	Over Current Protection : Latch-type or Hiccup-type Tracking function Soft-Start : External Adjustable UVLO OVP Thermal SSCG : Ver. 03x/13x PG Phase : External
R1273 AEC	4.0	34	36	14000	0.7 (Adj)	5.3 (Adj)	Built-in MOS-FET	Synchronous Rectification	Forced PWM, PWM/ VFM	250	1000	–	Yes	-40	125	A	QFN0505-32B	Over Current Protection : Latch-type or Hiccup-type Tracking function Soft-Start : External Adjustable UVLO OVP Thermal SSCG : Ver. 03x/ 13x PG Phase : External

Power Supply

DC/DC(Buck Converter/SW.REG.)

Part No.	Input Voltage Range [V]		Absolute Max. Ratings [V]	Output Current [mA]	Output Voltage Range [V]		SW. Device	Rectification	SW. Control	Oscillation Frequency [kHz]		Maximum Duty [%]	External Clock Synchronization	Operating Temp. Range [℃]		Automotive Quality Class	Package	key Features
	min.	max.			min.	max.				min.	max.			min.	max.			
R1272 AEC ♡	4.0	34	36	–	0.7 (Adj)	5.3 (Adj)	Controller	Synchronous Rectification	Forced PWM, PWM/VFM	250	1000	–	Yes	-40	125	A	HSOP-18	Over Current Protection : Latch-type or Hiccup-type Tracking function Soft-Start : External Adjustable UVLO OVP Thermal SSCG : Ver. 03x/ 13x PG Phase : External
R1271 AEC ♡ 2030	3.6	30	42	1000	3.3,5.0 (Fix)		Built-in MOS-FET	Synchronous Rectification	Forced PWM	2000 (Fix)		–	–	-40	125	A	DFN3030-12B HSOP-18	Over Current Protection : Latch-type or Hiccup-type Soft-Start : External Adjustable UVLO OVLO Thermal SSCG : Ver. xx1C/D PG
R1278 AEC ♡ 2030	3.6	30	36	2000	3.3 (Adj)	5.0 (Adj)	Built-in MOS-FET	Synchronous Rectification	Forced PWM	1800	2200	–	Yes	-40	125	A	HSOP-18	Over Current Protection : Hiccup-type Tracking function Soft-Start : External Adjustable UVLO OVLO Thermal SSCG : Ver. 003C PG Phase : External
R1276 AEC ♡ 2030	3.6	30	36	3000	0.7 (Adj)	6.5 (Adj)	Built-in MOS-FET	Synchronous Rectification	Forced PWM, PWM/VFM	250	1000	–	Yes	-40	125	A	HSOP-18	Over Current Protection : Hiccup-type Tracking function Soft-Start : External Adjustable UVLO OVLO Thermal SSCG : Ver. 00xC PG Phase : External
RP550 AEC ♡	2.3	4.5 or 5.5	6.5	1000 × 2ch.	0.6 (Adj)	3.3 (Adj)	Built-in MOS-FET	Synchronous Rectification	Forced PWM, PWM/VFM	2300 (Fix)		100	–	-40	105	A	DFN3030-12	2ch. Over Current Protection : Latch-type Soft-Start UVLO Thermal
RP506 AEC ♡	2.5	4.5 or 5.5	6.5	2000	0.8 (Fix) 0.6/ 0.8 (Adj)	3.3 (Fix) 4.0 (Adj)	Built-in MOS-FET	Synchronous Rectification	Forced PWM, PWM/VFM	1200 (Fix) 2300 (Fix)		100	–	-40	105	A	DFN3030-12	Over Current Protection : Latch-type Soft-Start : External Adjustable UVLO Thermal PG Discharge : Ver. H/L
NJW4110 ♡	2.7	5.5	7.0	3000	0.6	5.0	Built-in MOS-FET	Synchronous Rectification	PWM	100	2400	100	Yes	-40	125	T1	EQFN24-LE	Light Load Mode Over Current Protection (Hiccup type) Thermal Soft-Start : External Adjustable UVLO PG
RP510 AEC ♡	2.5	5.5	6.5	4000	0.8 (Fix/ Adj)	3.3 (Fix/ Adj)	Built-in MOS-FET	Synchronous Rectification	Forced PWM	2300 (Fix)		100	–	-40	105	A	DFN3030-12	Over Current Protection : Latch-type or Fold back-type Soft-Start : External Adjustable UVLO Thermal PG Discharge : Ver. H/N

DC/DC(Boost Converter/SW.REG.)

Part No.	Input Voltage Range [V]		Absolute Max. Ratings [V]	Output Current [A]	Output Voltage Range [V]		SW. Device	SW. Control	Oscillation Frequency [kHz]		Maximum Duty [%]	External Clock Synchronization	Operating Temp. Range [℃]		Automotive Quality Class	Package	key Features
	min.	max.			min.	max.			min.	max.			min.	max.			
NJW4132 ♡	4.55	40	45	1.75	4.55	38	Built-in MOS-FET	PWM	2000 (Fix)		80	Yes	-40	125	T1	SOT-89-5-2	PWM, External Clock Synchronization Over Current Protection (Hiccup type) Thermal Soft-Start UVLO Phase

Part No.	Input Voltage Range [V]		Absolute Max. Ratings [V]	Output Current [A]	Output Voltage Range [V]		SW. Device	SW. Control	Oscillation Frequency [kHz]		Maximum Duty [%]	External Clock Synchronization	Operating Temp. Range [℃]		Automotive Quality Class	Package	key Features
	min.	max.			min.	max.			min.	max.			min.	max.			
NJW4133 AEC	3.0	40	45	5.0	3.0	38	Built-in MOS-FET	PWM	100	2400	92	Yes	-40	125	T1	HSOP8-M1	Over Current Protection (Hiccup type) Thermal Soft-Start OVP UVLO
NJW4140 ♡	3.0	40	45	-	3.0	-	Controller	PWM	40	1000	85	-	-40	125	T1	MSOP8 (VSP8)	Available for Fly-Back AEC=Z2 Pulse-by-pulse current limit circuit Soft-Start UVLO
NJW1871 AEC ♡	2.5	40	45	-	2.5	-	Controller	PWM	50	1000	87	Yes	-40	125	T1	MSOP10 (VSP10)	5.2V Gate Drive Available for Fly-Back RUN function Over Current Protection (Hiccup type) Thermal Soft-Start UVLO OVP
NJW4142 AEC ♡	2.5	40	45	-	2.5	-	Controller	PWM	50	1000	87	Yes	-40	125	T1	MSOP10 (VSP10)	10V Gate Drive Available for Fly-Back RUN function Over Current Protection (Hiccup type) Thermal Soft-Start UVLO OVP
U.D. NJW1871A AEC	4.5 (TBD)	40	45	-	4.5 (TBD)	-	Controller	PWM	1000	2000 (TBD)	(TBD)	Yes	-40	125	T1	MSOP10 (VSP10)	5.2V Gate Drive Available for Fly-Back RUN function Over Current Protection (Hiccup type) Thermal Soft-Start UVLO OVP

Voltage Detectors (VD), Watchdog Timers (WDT)

Part No.	Operating Voltage Range [V]		Absolute Max. Ratings [V]	Detector Threshold Range [V]		Detector Threshold Accuracy [%]	Release Delay Time	LDO	WDT	Supply Current [μA]	Operating Temp. Range [℃]		Automotive Quality Class	Package	key Features
	min.	max.		min.	max.	Full Temp.				typ.	min.	max.			
R5117 AEC ♡	3.5	42	50	BVD:3.5 SVD:2.5	BVD:12 SVD:5.0	BVD:-2 to 1 SVD:-1.25 to 0.75	Adjustable	Yes Io=500mA	–	35	-40	125	A	HSOP-8E HQFN0808-28	Voltage Regulator with Battery Voltage Detector Peak : 60V Thermal
R3152 AEC ♡	3.0	42	50	OV:1.1 UV:1.0	OV:5.9 UV:4.8	-1.25 to 0.75	Adjustable	–	–	1.5	-40	125	A	SOT-23-6	Window Voltage Detector SENSE Pin Detection
R5116 AEC ♡	3.5	42	50	OV:3.3 UV:2.5	OV:5.5 UV:5.0	-1.25 to 0.75	Adjustable	Yes Io=500mA	–	25	-40	125	A	HSOP-8E HQFN0808-28	Voltage Regulator with Window Voltage Detector Peak : 60V Thermal
R5112 AEC ♡	3.5	42	50	B:1.6 D:2.9	B:4.8 D:4.8	± 1.6	Adjustable	Yes Io=200mA	–	3.8	-40	125	A	HSOP-8E	Voltage Regulator with VD Peak : 60V Thermal
R5114 AEC ♡	3.5	42	50	2.5	4.8	± 1.6	Adjustable	Yes Io=250mA	Yes	8.5	-40	125	A	HSOP-8E HSOP-18 HQFN0808-28	Timeout WDT Peak : 60V Thermal
R5115 AEC ♡	3.5	42	50	2.5	4.8	± 1.6	Adjustable	Yes Io=250mA	Yes	8.5	-40	125	A	HSOP-8E HSOP-18 HQFN0808-28	Window WDT Peak : 60V Thermal
R3154 AEC ♡	3.0	42	50	OV:0.75 UV:0.55	OV:3.7 UV:3.3	-1.25 to 0.75	Adjustable	–	–	2	-40	125	A	SOT-23-6	Applicable to failure diagnosis Window Voltage Detector SENSE Pin Detection Type
U.D. NP4271 AEC	4.0	40	45	4.6 4.1	5.6	Low: ± 2.0 High: ± 5.0	Adjustable	Yes Io=500mA	Yes	120	-40	125	P	HSOP-8-AC	Window Voltage Detector
R3121xxxxA AEC ♡	1.4	36	50	3	12	-2.2 to 2.5	Adjustable	–	–	3.8	-40	125	A	SOT-23-6	VDD Pin Detection Type
R5110 AEC ♡	3.5	36	50	1.6	5.5	± 1.8	Adjustable	Yes Io=500mA	Yes	25	-40	125	A	HSOP-8E HSOP-18 HQFN0808-28	Timeout or Window WDT Peak : 60V Thermal Inrush
R5111 AEC ♡	3.5	36	50	1.6	5.5	± 1.8	Adjustable	Yes Io=300mA	Yes	25	-40	125	A	HSOP-8E HSOP-18 HQFN0808-28	Timeout or Window WDT Peak : 60V Thermal Inrush
R3121xxxxE AEC ♡	2.4	6	7	3	12	-2.2 to 2.5	Adjustable	–	–	3.5	-40	125	A	SOT-23-6	SENSE Pin Detection Type

Corner Sensor ECU

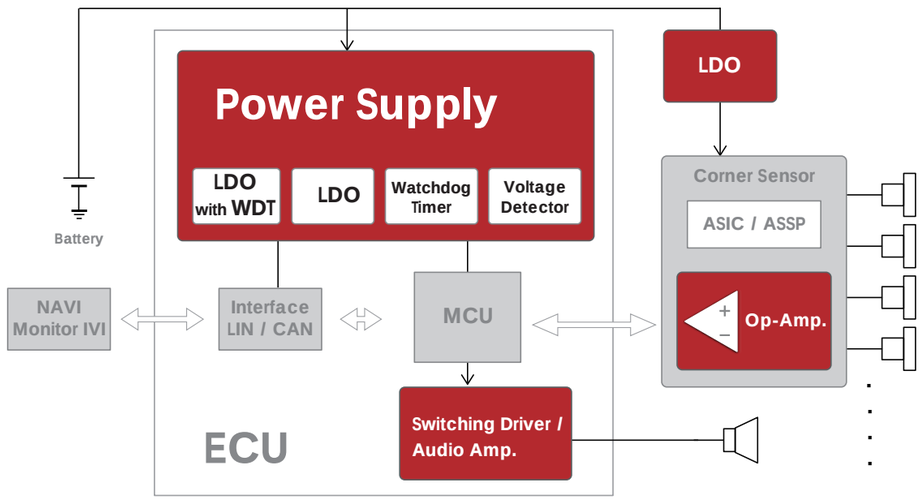

U.D. : Under development NEW : New product AEC : AEC-Q100 Compliant AEC : AEC-Q100 to be Compliant

♡ : Products available in PRODUCT LONGEVITY PROGRAM ♡ xxxx : Products available in PRODUCT LONGEVITY PROGRAM with time limit

Operational Amplifier (Op-Amp.)

Part No.	No. of Circuit	Power Supply	Supply Voltage [V]		Characteristics					Operating Temp. Range [℃]		Automotive Quality Class	Package
					V_{IO} [mV]		I_{CC} [mA]		SR[V/μs]				
			min.	max.	typ.	max.	typ.	max.	typ.	min.	max.		
NJM8532	2	Single	1.8	14	1	5	0.58	0.9	0.4	-40	125	T1	MSOP8(VSP8)
NJU7047 ♡	2	Single	2.7	5.5	0.9	5	2.7	4.5	9	-40	125	T1	MSOP8(TVSP8)
NJU7057 ♡	2	Single	1.8	5.5	0.8	4	0.52	0.84	0.8	-40	125	T1	MSOP8(TVSP8)
NJU77552 AEC	2	Single	2.2	5.5	1	6.5	0.1	0.122	0.8	-40	125	T1	MSOP8(VSP8)

Power Supply

- Automatic : Automatic Shift to ECO Mode
- Manual : Manual Shift to ECO Mode
- Peak : Peak Voltage, Duration time=200ms
- Thermal : Thermal Shutdown Circuit
- Ripple : Ripple Rejection, Frequency = 1kHz
- Discharge : Auto-discharge Function
- Reverse : Reverse Current Protection Circuit
- Constant : Constant Slope Circuit
- High Immunity : Enhanced Noise Immunity
- Inrush : Inrush Current Limit Circuit
- Diode : Diode Rectification
- Soft-Start : Soft-start Circuit
- UVLO : Undervoltage Lockout Circuit
- OVLO : Overvoltage Lockout Circuit
- OVP : Overvoltage Protection Circuit
- Phase : Phase Compensation
- SSCG : Spectrum Diffusion Type Oscillator
- PG : Power Good Function
- Sequencing : Start-up Sequencing Control

LDO Regulators

Part No.	Input Voltage Range [V]		Absolute Max. Ratings [V]	Output Current [mA]	Output Voltage Range*1 [V]		Output Voltage Accuracy [%]	Supply Current [μA]	Operating Temp. Range [℃]		Auto-motive Quality Class	Package	key Features
	min.	max.			min.	max.	Full Temp.	typ.	min.	max.			
R1525 AEC ♡	3.5	42	50	200	1.8	12	± 1.6	2.2	-40	125	K	SOT-23-5 SOT-89-5 HSOP-6J HSOP-8E	Peak : 60V Thermal High Immunity
R5114 AEC ♡	3.5	42	50	250	3.3 VD: 2.5	5.0 VD: 4.8	± 1.6 VD: ± 1.6	8.5	-40	125	K	HSOP-8E HSOP-18 HQFN0808-28	Timeout WDT Peak : 60V Thermal
R5115 AEC ♡	3.5	42	50	250	3.3 VD: 2.5	5.0 VD: 4.8	± 1.6 VD: ± 1.6	8.5	-40	125	K	HSOP-8E HSOP-18 HQFN0808-28	Window WDT Peak : 60V Thermal
R1526 AEC ♡	3.5	42	50	300	1.8	9	± 1.6	32	-40	125	K	HSOP-8E	Peak : 60V Ripple : 50dB(f=100Hz) Thermal High Immunity

Part No.	Input Voltage Range [V]		Absolute Max. Ratings [V]	Output Cur-rent [mA]	Output Voltage Range*1 [V]		Output Voltage Accuracy [%]	Supply Current [μA]	Operating Temp. Range [℃]		Auto-motive Quality Class	Package	key Features
	min.	max.			min.	max.	Full Temp.	typ.	min.	max.			
R5116 AEC ♡	3.5	42	50	500	3.3 UV: 2.5 OV: 3.3	5.0 UV: 5.0 OV: 5.5	-1.25 to 0.75 UV: -1.25 to 0.75 OV: -1.25 to 0.75	25	-40	125	K	HSOP-8E HQFN0808-28	Built-in Window VD Released Hysteresis: 0.7% (Max.) Peak : 60V Thermal
R5117 AEC ♡	3.5	42	50	500	3.3 SVD: 2.5 BVD: 3.5	5.0 SVD: 5.0 BVD: 12.0	-1.25 to 0.75 SVD:-1.25 to 0.75 BVD:-2.0 to 1.0	35	-40	125	K	HSOP-8E HQFN0808-28	Built-in Dual VD SVD Released Hysteresis: 0.7% (Max.) BVD Released Hysteresis: 5.0% (Max.) Peak : 60V Thermal
NJW4104 AEC	4.0	40	45	200	3.3	5.0	± 2.0	A ver.:5.5 B ver.:5.0	-40	125	T1	SOT-89-5-2 SOT-89-3	Ultra-low current consumption UVLO Thermal
NJW4107 AEC ♡	4.0	40	45	300	3.3	5.0	± 1.5	A ver.:75 B ver.:70	-40	125	T1	SOT-89-5-2 SOT-89-3	Fast Transient Response UVLO Thermal
NJW4105 AEC	4.0	40	45	500	3.3	8.0	± 1.5	65	-40	125	T1	TO-252-5-L5	Fast Transient Response Output voltage accuracy includes regulation Thermal
NJW4106 AEC	4.0	40	45	500	2.5	16	VADJ ± 2.0	65	-40	125	T1	TO-252-5-L5	Fast Transient Response Adjustable Type Output voltage accuracy includes regulation Thermal
U.D. NP4271 AEC	4.0	40	45	500	3.3	5.0	± 2.0	120	-40	125	P	HSOP-8-AC	WDT, Window VD
R1524 AEC ♡	3.5	36	50	200	1.8	12	± 1.6	2.2	-40	125	K	SOT-23-5 SOT-89-5 HSOP-6J HSOP-8E	Peak : 60V Thermal
R1513 AEC ♡	3.5	36	50	300	1.2(Fix) 1.2(Adj)	5(Fix) 18(Adj)	± 1	75	-40	125	K	HSOP-6J	Ripple : 70dB(f=100Hz) Peak : 60V Thermal Discharge : Ver. D
R5111 AEC ♡	3.5	36	50	300	1.8 VD: 1.6	5.0 VD: 5.5	± 1.5 VD: ± 1.8	25	-40	125	K	HSOP-8E HSOP-18 HQFN0808-28	Timeout or Window WDT Peak : 60V Thermal Inrush
R1517 AEC ♡	3.5	36	50	500	2.5(Fix) 2.5(Adj)	9(Fix) 20(Adj)	± 1.8(Fix) ± 45mV(Adj)	18	-40	125	K	HSOP-6J TO-252-5-P2	Constant : External Adjustable Ver. E/F Peak : 60V Thermal Discharge : Ver. D/F
R5110 AEC ♡	3.5	36	50	500	1.8 VD: 1.6	5.0 VD: 5.5	± 1.5 VD: ± 1.8	25	-40	125	K	HSOP-8E HSOP-18 HQFN0808-28	Timeout or Window WDT Peak : 60V Thermal Inrush
R1518 AEC ♡	3.5	36	50	1000	2.5(Fix) 2.5(Adj)	9(Fix) 20(Adj)	± 1.8(Fix) ± 45mV(Adj)	18	-40	125	K	HSOP-6J TO-252-5-P2	Constant : External Adjustable Ver. E/F Peak : 60V Thermal Discharge : Ver. D/F
U.D. NJM11100 AEC	2.1	18	20	240	1.3	17	Vref ± 2.5	200	-40	125	T1	SOT-23-6-1	Ripple : 75dB(f=1kHz) Adjustable Type With Noise Bypass Pin Thermal Reverse
RP170 AEC ♡	2.6	10	12	300	1.2	6	± 3.0	23	-40	125	K	SOT-23-5 SOT-89-5	Ripple : 70dB Thermal Discharge : Ver. D Constant
NJM2879 AEC	2.3	6.5	7	200	5.1	5.0	± 2.0	150	-40	125	H	SOT-23-5	Discharge Thermal Reverse
NJM12884 AEC	2.3	6.5	7	500	5.1	5.0	± 2.0	200	-40	125	H	DFN8-WA (ESON8-WA)	Discharge Thermal Soft-Start Reverse
RP132 AEC ♡	1.4	6.5	7	1000	0.8(Fix) 0.8(Adj)	5(Fix) 5.5(Adj)	± 1.9(Fix) ± 29mV(Adj)	65	-40	105	J	SOT-89-5 HSOP-6J TO-252-5-P2	Ripple : 70dB Thermal Inrush Discharge : Ver. D
NEW NR1640 AEC ♡	2.7	5.5	6.5	200	2.5	4.8	± 1.5	350	-40	125	P	SOT-23-5-DC	Outout noise : 6μVrms Ripple : **80dB(f=100kHz)** Thermal Discharge
RP111 AEC ♡	1.4	5.25	6	500	0.7(Fix) 0.7(Adj)	3.4(Fix) 3.6(Adj)	± 1.5(Fix) ± 50mV(Adj)	80	-40	105	J	SOT-23-5 SOT-89-5 HSOP-6J	Load regulation: Typ. 1mV Load transient response accuracy: Typ. -75mV/+45mV, 1mA ⇔ 250mA (1/2 IOUT (Max.)) Ripple : 75dB Thermal Discharge : Ver. D Inrush

*1 Please refer to the product data sheet for the output voltage lineup.

Power Supply

DC/DC(Buck Converter/SW.REG.)

Part No.	Input Voltage Range [V] min.	Input Voltage Range [V] max.	Absolute Max. Ratings [V]	Output Current [mA]	Output Voltage Range [V] min.	Output Voltage Range [V] max.	SW. Device	Rectification	SW. Control	Oscillation Frequency [kHz] min.	Oscillation Frequency [kHz] max.	Maximum Duty [%]	External Clock Synchronization	Operating Temp. Range [℃] min.	Operating Temp. Range [℃] max.	Automotive Quality Class	Package	key Features
R1271 AEC ♡ 2030	3.6	30	42	1000	3.3,5.0 (Fix)		Built-in MOSFET	Synchronous Rectifi i cation	Forced PWM	2000 (Fix)		–	–	-40	125	K	DFN3030-12B HSOP-18	Over Current Protection : Latch-type or Hiccup-type Soft-Start : External Adjustable UVLO OVLO Thermal SSCG : Ver. xx1C/D PG
R1245 AEC ♡	4.5	30	32	1200	0.8 (Adj)	27.3 (Adj)	Built-in MOSFET	Diode Rectifi i cation	PWM	A/B:330 (Fix) C/D:500 (Fix) E/F:1000 (Fix) G/H:2400 (Fix)		–	–	-40	105	J	HSOP-8E DFN2020-8	Over Current Protection : Latch-type or Hiccup-type Soft-Start UVLO Thermal
R1278 AEC ♡ 2030	3.6	30	36	2000	3.3 (Adj)	5.0 (Adj)	Built-in MOSFET	Synchronous Rectifi i cation	Forced PWM	1800	2200	–	Yes	-40	125	K	HSOP-18	Over Current Protection : Hiccup-type Tracking function Soft-Start : External Adjustable UVLO OVLO Thermal SSCG : Ver. 003C PG Phase : External
R1276 AEC ♡ 2030	3.6	30	36	3000	0.7 (Adj)	6.5 (Adj)	Built-in MOSFET	Synchronous Rectifi i cation	Forced PWM, PWM/ VFM	250	1000	–	Yes	-40	125	K	HSOP-18	Over Current Protection : Hiccup-type Tracking function Soft-Start : External Adjustable UVLO OVLO Thermal SSCG : Ver. 00xC PG Phase : External
RP506 AEC ♡	2.5	4.5 or 5.5	6.5	2000	0.8 (Fix) 0.6/ 0.8 (Adj)	3.3 (Fix) 4.0 (Adj)	Built-in MOSFET	Synchronous Rectifi i cation	Forced PWM, PWM/ VFM	1200 (Fix) 2300 (Fix)		100	–	-40	125	K	DFN3030-12	Over Current Protection : Latch-type Soft-Start : External Adjustable UVLO Thermal PG Discharge : Ver. H/L
RP510 AEC ♡	2.5	5.5	6.5	4000	0.8 (Fix/ Adj)	3.3 (Fix/ Adj)	Built-in MOSFET	Synchronous Rectifi i cation	Forced PWM	2300 (Fix)		100	–	-40	125	K	DFN3030-12	Over Current Protection : Latch-type or Fold back-type Soft-Start : External Adjustable UVLO Thermal PG Discharge : Ver. H/N

Voltage Detectors (VD), Watchdog Timers (WDT)

Part No.	Operating Voltage Range [V] min.	Operating Voltage Range [V] max.	Absolute Max. Ratings [V]	Detector Threshold Range [V] min.	Detector Threshold Range [V] max.	Detector Threshold Accuracy [%] Full Temp.	Release Delay Time	LDO	WDT	Supply Current [μA] typ.	Operating Temp. Range [℃] min.	Operating Temp. Range [℃] max.	Automotive Quality Class	Package	key Features
R5117 AEC ♡	3.5	42	50	BVD:3.5 SVD:2.5	BVD:12 SVD:5.0	BVD:-2 to 1 SVD:-1.25 to 0.75	Adjustable	Yes Io= 500mA	–	35	-40	125	K	HSOP-8E HQFN0808-28	Voltage Regulator with Battery Voltage Detector Peak : 60V Thermal
R3152 AEC ♡	3.0	42	50	OV:1.1 UV:1.0	OV:5.9 UV:4.8	-1.25 to 0.75	Adjustable	–	–	1.5	-40	125	K	SOT-23-6	Window Voltage Detector SENSE Pin Detection
R5116 AEC ♡	3.5	42	50	OV:3.3 UV:2.5	OV:5.5 UV:5.0	-1.25 to 0.75	Adjustable	Yes Io= 500mA	–	25	-40	125	K	HSOP-8E HQFN0808-28	Voltage Regulator with Window Voltage Detector Peak : 60V Thermal

Part No.	Operating Voltage Range [V] min.	Operating Voltage Range [V] max.	Absolute Max. Ratings [V]	Detector Threshold Range [V] min.	Detector Threshold Range [V] max.	Detector Threshold Accuracy [%] Full Temp.	Release Delay Time	LDO	WDT	Supply Current [μA] typ.	Operating Temp. Range [℃] min.	Operating Temp. Range [℃] max.	Automotive Quality Class	Package	key Features
R5114 AEC ♡	3.5	42	50	2.5	4.8	± 1.6	Adjustable	Yes Io= 250mA	Yes	8.5	-40	125	K	HSOP-8E HSOP-18 HQFN0808-28	Timeout WDT Peak : 60V Thermal
R5115 AEC ♡	3.5	42	50	2.5	4.8	± 1.6	Adjustable	Yes Io= 250mA	Yes	8.5	-40	125	K	HSOP-8E HSOP-18 HQFN0808-28	Window WDT Peak : 60V Thermal
R3154 AEC ♡	3.0	42	50	OV:0.75 UV:0.55	OV:3.7 UV:3.3	-1.25 to 0.75	Adjustable	–	–	2	-40	125	R	SOT-23-6	Applicable to failure diagnosis Window Voltage Detector SENSE Pin Detection Type
U.D. NP4271 AEC	4.0	40	45	4.6 4.1	5.6	Low: ± 2.0 High: ± 5.0	Adjustable	Yes Io= 500mA	Yes	120	-40	125	P	HSOP-8-AC	Window Voltage Detector
R3121xxxxA AEC ♡	1.4	36	50	3	12	-2.2 to 2.5	Adjustable	–	–	3.8	-40	125	K	SOT-23-6	VDD Pin Detection Type
R5110 AEC ♡	3.5	36	50	1.6	5.5	± 1.8	Adjustable	Yes Io= 500mA	Yes	25	-40	125	K	HSOP-8E HSOP-18 HQFN0808-28	Timeout or Window WDT Peak : 60V Thermal Inrush
R5111 AEC ♡	3.5	36	50	1.6	5.5	± 1.8	Adjustable	Yes Io= 300mA	Yes	25	-40	125	K	HSOP-8E HSOP-18 HQFN0808-28	Timeout or Window WDT Peak : 60V Thermal Inrush
R3121xxxxE AEC ♡	2.4	6	7	3	12	-2.2 to 2.5	Adjustable	–	–	3.5	-40	125	K	SOT-23-6	SENSE Pin Detection Type

Switching Driver (High Side Switch/Low Side Switch)

Part No.	Absolute Max. Ratings [V] Drain-Source Voltage	Absolute Max. Ratings [V] Input Voltage	Drain-Source Voltage [V] max.	Supply Voltage Range [V] min.	Supply Voltage Range [V] max.	Input Voltage Range [V] min.	Input Voltage Range [V] max.	Quiescent Current [μA]	Input Current [μA]	Drain Current [A]	On-Resistance [Ω]	Operating Temp. Range [℃] min.	Operating Temp. Range [℃] max.	Automotive Quality Class	Function	Package
NJW4830♡	45	6.0	40	4.6	40	2.64	5.5	110	150	0.5	0.35	-40	125	T1	High Side Switch (P ch.)	SOT-89-5-2

Audio ICs

Power Amplifiers

Part No.	Channel	Operating Voltage Range [V] min.	Operating Voltage Range [V] max.	Output Power Po	Output Power V+ [V]	Output Power RL [ohm]	Stand-by	Mute	Operating Temp. Range [℃] min.	Operating Temp. Range [℃] max.	Automotive Quality Class	Package
NJU7089	BTL:1ch.	1.8	5.5	1.2W typ.	5	8	Yes	Yes	-40	105	T	SSOP20-C3, MSOP8(VSP8), HTSSOP24-P1
NJU7089 AEC ♡	BTL:1ch.	1.8	5.5	1.2W typ.	5	8	Yes	Yes	-40	105	T	DFN8-V1(ESON8-V1)
NJU72060	BTL:1ch	2.7	5.5	500mW typ.	5	8	Yes	Yes	-40	105	T	MSOP8(VSP8), HSOP8-M1, DFN8-V1(ESON8-V1)

Class D Amplifiers

Part No.	Channel	Operating Voltage Range [V] min.	Operating Voltage Range [V] max.	Output Power Po	Output Power V+ [V]	Output Power RL [ohm]	Stand-by	Mute	Operating Temp. Range [℃] min.	Operating Temp. Range [℃] max.	Automotive Quality Class	Package
NJU8759A	BTL:1ch.	1.8	5.5	3.0W typ.	5	4	Yes	Yes	-40	105	T	HSOP8-M1
U.D. NA1150	BTL:1 c h .	2.6	5.5	1.2W typ.	5	8	Yes	Yes	-40	125	P	MSOP8(VSP8), DFN8-V1(ESON8-V1)

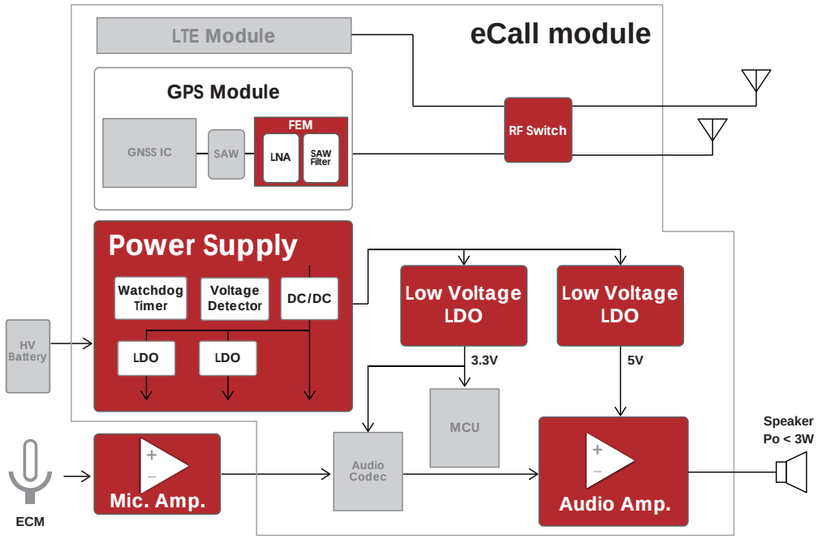

U.D. : Under development NEW : New product AEC : AEC-Q100 Compliant AEC : AEC-Q100 to be Compliant

♡ : Products available in PRODUCT LONGEVITY PROGRAM ♡xxxx : Products available in PRODUCT LONGEVITY PROGRAM with time limit

Audio ICs

Microphone Amplifiers

Part No.	Operating Voltage Range [V]		Channel	Voltage Gain (※) [dB]	Sensitivity Adjust	2wire/ 3wire	Operating Temp. Range [℃]		Automotive Quality Class	Key Features	Package
	min.	max.					min.	max.			
NJU7907A	4.5	16	1ch.	+24 to +40	-	2wire	-40	85	-	Standard	MSOP10(TVSP10)
NJU72090	1.8	16	1ch.	+24 to +40	Yes	2wire	-40	105	-	FET for impedance converter, Fine Tune Sensitivity	MSOP10(TVSP10)
NJU72097	2.7	16	1ch.	+24 to +40	Yes	2wire	-40	105	-	Fine Tune Sensitivity Regulator for Mic. Capsule	MSOP10(TVSP10)

※ Set by enternal resistors.

Power Amplifiers

Part No.	Channel	Operating Voltage Range [V]		Output Power			Stand-by	Mute	Operating Temp. Range [℃]		Automotive Quality Class	Package
		min.	max.	Po	V+ [V]	RL [ohm]			min.	max.		
NJU7089	BTL:1ch.	1.8	5.5	1.2W typ.	5	8	Yes	Yes	-40	105	T	SSOP20-C3, MSOP8(VSP8), HTSSOP24-P1
NJU7089 AEC ♡	BTL:1ch.	1.8	5.5	1.2W typ.	5	8	Yes	Yes	-40	105	T	DFN8-V1(ESON8-V1)
NJU72060	BTL:1ch	2.7	5.5	500mW typ.	5	8	Yes	Yes	-40	105	T	MSOP8(VSP8), HSOP8-M1, DFN8-V1(ESON8-V1)

Class D Amplifiers

Part No.	Channel	Operating Voltage Range [V]		Output Power			Stand-by	Mute	Operating Temp. Range [℃]		Automotive Quality Class	Package
		min.	max.	Po	V+ [V]	RL [ohm]			min.	max.		
NJU8759A	BTL:1ch.	1.8	5.5	3.0W typ.	5	4	Yes	Yes	-40	105	T	HSOP8-M1
U.D. NA1150	BTL:1 c h .	2.6	5.5	1.2W typ.	5	8	Yes	Yes	-40	125	P	MSOP8(VSP8), DFN8-V1(ESON8-V1)

(Note)Since they include products for general consumer use, please contact our sales office when you consider it.

Power Supply

Automatic : Automatic Shift to ECO Mode
Manual : Manual Shift to ECO Mode
Peak : Peak Voltage, Duration time=200ms
Thermal : Thermal Shutdown Circuit
Ripple : Ripple Rejection, Frequency = 1kHz
Discharge : Auto-discharge Function
Reverse : Reverse Current Protection Circuit
Constant : Constant Slope Circuit
High Immunity : Enhanced Noise Immunity
Inrush : Inrush Current Limit Circuit
Diode : Diode Rectification
Soft-Start : Soft-start Circuit
UVLO : Undervoltage Lockout Circuit
OVLO : Overvoltage Lockout Circuit
OVP : Overvoltage Protection Circuit
Phase : Phase Compensation
SSCG : Spectrum Diffusion Type Oscillator
PG : Power Good Function
Sequencing : Start-up Sequencing Control

LDO Regulators

Part No.	Input Voltage Range [V]		Absolute Max. Ratings [V]	Output Current [mA]	Output Voltage Range*1 [V]		Output Voltage Accuracy [%]	Supply Current [μA]	Operating Temp. Range [℃]		Automotive Quality Class	Package	key Features
	min.	max.			min.	max.	Full Temp.	typ.	min.	max.			
R1525 AEC ♡	3.5	42	50	200	1.8	12	± 1.6	2.2	-40	125	A	SOT-23-5 SOT-89-5 HSOP-6J HSOP-8E	Peak : 60V Thermal High Immunity
R5112 AEC ♡	3.5	42	50	200	1.8 VD B: 1.6 D: 2.9	5.0 VD B: 4.8 D: 4.8	± 1.6 VD: ± 1.6	3.8	-40	125	A	HSOP-8E	+VD(Voltage Detector) Peak : 60V Thermal
R5114 AEC ♡	3.5	42	50	250	3.3 VD: 2.5	5.0 VD: 4.8	± 1.6 VD: ± 1.6	8.5	-40	125	A	HSOP-8E HSOP-18 HQFN0808-28	Timeout WDT Peak : 60V Thermal
R5115 AEC ♡	3.5	42	50	250	3.3 VD: 2.5	5.0 VD: 4.8	± 1.6 VD: ± 1.6	8.5	-40	125	A	HSOP-8E HSOP-18 HQFN0808-28	Window WDT Peak : 60V Thermal
R1526 AEC ♡	3.5	42	50	300	1.8	9	± 1.6	32	-40	125	A	HSOP-8E	Peak : 60V Ripple : 50dB(f=100Hz) Thermal High Immunity
R5116 AEC ♡	3.5	42	50	500	3.3 UV: 2.5 OV: 3.3	5.0 UV: 5.0 OV: 5.5	-1.25 to 0.75 UV: -1.25 to 0.75 OV: -1.25 to 0.75	25	-40	125	A	HSOP-8E HQFN0808-28	Built-in Window VD Released Hysteresis: 0.7% (Max.) Peak : 60V Thermal
R5117 AEC ♡	3.5	42	50	500	3.3 SVD: 2.5 BVD: 3.5	5.0 SVD: 5.0 BVD:12.0	-1.25 to 0.75 SVD:-1.25 to 0.75 BVD:-2.0 to 1.0	35	-40	125	A	HSOP-8E HQFN0808-28	Built-in Dual VD SVD Released Hysteresis: 0.7% (Max.) BVD Released Hysteresis: 5.0% (Max.) Peak : 60V Thermal
NJW4104 AEC	4.0	40	45	200	3.3	5.0	± 2.0	A ver.:5.5 B ver.:5.0	-40	125	T1	SOT-89-5-2 SOT-89-3	Ultra-low current UVLO Thermal
NJW4107 AEC ♡	4.0	40	45	300	3.3	5.0	± 1.5	A ver.:75 B ver.:70	-40	125	T1	SOT-89-5-2 SOT-89-3	Fast Transient Response UVLO Thermal
NJW4105 AEC	4.0	40	45	500	3.3	8.0	± 1.5	65	-40	125	T1	TO-252-5-L5	Fast Transient Response Output voltage accuracy includes regulation Thermal
NJW4106 AEC	4.0	40	45	500	2.5	16	VADJ ± 2.0	65	-40	125	T1	TO-252-5-L5	Fast Transient Response Adjustable Type Output voltage accuracy includes regulation Thermal
U.D. NP4271 AEC	4.0	40	45	500	3.3	5.0	± 2.0	120	-40	125	P	HSOP-8-AC	WDT, Window VD
R1524 AEC ♡	3.5	36	50	200	1.8	12	± 1.6	2.2	-40	125	A	SOT-23-5 SOT-89-5 HSOP-6J HSOP-8E	Peak : 60V Thermal
R5111 AEC ♡	3.5	36	50	300	1.8 VD: 1.6	5.0 VD: 5.5	± 1.5 VD: ± 1.8	25	-40	125	A	HSOP-8E HSOP-18 HQFN0808-28	Timeout or Window WDT Peak : 60V Thermal Inrush
R5110 AEC ♡	3.5	36	50	500	1.8 VD: 1.6	5.0 VD: 5.5	± 1.5 VD: ± 1.8	25	-40	125	A	HSOP-8E HSOP-18 HQFN0808-28	Timeout or Window WDT Peak : 60V Thermal Inrush

*1 Please refer to the product data sheet for the output voltage.

Power Supply

LDO Regulators

Part No.	Input Voltage Range [V] min.	Input Voltage Range [V] max.	Absolute Max. Ratings [V]	Output Current [mA]	Output Voltage Range*1 [V] min.	Output Voltage Range*1 [V] max.	Output Voltage Accuracy [%] Full Temp.	Supply Current [μA] typ.	Operating Temp. Range [℃] min.	Operating Temp. Range [℃] max.	Automotive Quality Class	Package	key Features
U.D. NJM11100 AEC	2.1	18	20	240	1.3	17	Vref ± 2.5	200	-40	125	T1	SOT-23-6-1	Ripple : 75dB(f=1kHz) Adjustable Type With Noise Bypass Pin Thermal Reverse
RP130 AEC ♡	1.7	6.5	7	150	1.2	5	± 1.5	38	-40	105	A	DFN1212-4 SOT-23-5	Ripple : 80dB Discharge : Ver. D
NJM2879 AEC	2.3	6.5	7	200	5.1	5.0	± 2.0	150	-40	125	H	SOT-23-5	Discharge Thermal Reverse
NJM12884 AEC	2.3	6.5	7	500	5.1	5.0	± 2.0	200	-40	125	H	DFN8-WA (ESON8-WA)	Discharge Thermal Soft-Start Reverse
NEW NR1640 AEC ♡	2.7	5.5	6.5	200	2.5	4.8	± 1.5	350	-40	125	P	SOT-23-5-DC	Outout noise : 6μVrms Ripple **: 80dB(f=100kHz)** Thermal Discharge
RP154 AEC ♡	1.4	5.25	6	300	0.8	3.7	± 3.0	50	-40	105	A	DFN2020-8 SOT-23-6	2ch. Ripple : 75dB Discharge : Ver. B
RP108 AEC ♡	1.6	5.25	6	3000	0.8(Fix) 0.8(Adj)	3.3(Fix) 4.2(Adj)	-3 to 2.4	350	-40	105	A	TO-252-5-P2	Thermal Reverse Constant Discharge : Ver. D/F

*1 Please refer to the product data sheet for the output voltage.

DC/DC(Buck Converter/SW.REG.)

Part No.	Input Voltage Range [V] min.	Input Voltage Range [V] max.	Absolute Max. Ratings [V]	Output Current [mA]	Output Voltage Range [V] min.	Output Voltage Range [V] max.	SW. Device	Rectifi i cation	SW. Control	Oscillation Frequency [kHz] min.	Oscillation Frequency [kHz] max.	Maximum Duty [%]	External Clock Synchronization	Operating Temp. Range [℃] min.	Operating Temp. Range [℃] max.	Automotive Quality Class	Package	key Features
U.D. NC2905 AEC	4.0	75	80	1500	TBD	TBD	Built-in MOS-FET	Diode Rectifi i cation	PWM	100	2400	100	Yes	-40	125	P	HSOP-8-AC	Over Current Protection (Hiccup type) Thermal, Soft-Start Thermal Soft-Start UVLO SSCG Phase : External PG
U.D. NJW4175 AEC	3.4	40	45	600	0.8	26	Built-in MOS-FET	Syn-chro-nous Rectifi i cation	PWM/ PFM	2100 (Fix)		100	Yes	-40	125	T1	HSOP8-M1	Light Load Mode Over Current Protection (Hiccup type) Soft-Start PG Phase : Internal
NJW4171 AEC	3.4	40	45	2500	0.8	38	Built-in MOS-FET	Diode Rectifi i cation	PWM/ PFM(A) PWM(B)	100	2400	100	Yes	-40	125	T1	HSOP8-M1	Light Load Mode(A ver.) External Clock Synchronization Over Current Protection (Hiccup type) Thermal Soft-Start UVLO PG Phase : External
R1270 AEC ♡	3.6	34	36	3000	0.8 (Adj)	31.6 (Adj)	Built-in MOS-FET	Diode Rectifi i cation	Forced PWM, PWM/ VFM	300	2400	–	Yes	-40	125	A	HSOP-18	Over Current Protection : Latch-type or Hiccup-type Tracking function Soft-Start : External Adjustable UVLO OVLO Thermal Phase : External

Part No.	Input Voltage Range [V] min.	Input Voltage Range [V] max.	Absolute Max. Ratings [V]	Output Current [mA]	Output Voltage Range [V] min.	Output Voltage Range [V] max.	SW. Device	Rectifi i cation	SW. Control	Oscillation Frequency [kHz] min.	Oscillation Frequency [kHz] max.	Maximum Duty [%]	External Clock Synchronization	Operating Temp. Range [℃] min.	Operating Temp. Range [℃] max.	Automotive Quality Class	Package	key Features
U.D. R1277 AEC	4.0	34	36	8000	0.7 (Adj)	5.3 (Adj)	Built-in MOS-FET	Synchro-nous Rec-tification	Forced PWM, PWM/ VFM	250	1000	–	Yes	-40	125	A	QFN0505-**31**	Over Current Protection : Latch-type or Hiccup-type Tracking function Soft-Start : External UVLO OVP Thermal PG SSCG : Ver. 03x/13x Phase : External
R1273 AEC	4.0	34	36	14000	0.7 (Adj)	5.3 (Adj)	Built-in MOS-FET	Synchro-nous Rec-tification	Forced PWM, PWM/ VFM	250	1000	–	Yes	-40	125	A	QFN0505-32B	Over Current Protection : Latch-type or Hiccup-type Tracking function Soft-Start : External UVLO OVP Thermal PG SSCG : Ver. 03x/ 13x Phase : External
R1272 AEC ♡	4.0	34	36	–	0.7 (Adj)	5.3 (Adj)	Con-troller	Synchro-nous Rec-tification	Forced PWM, PWM/ VFM	250	1000	–	Yes	-40	125	A	HSOP-18	Over Current Protection : Latch-type or Hiccup-type Tracking function Soft-Start : External UVLO OVP Thermal PG SSCG : Ver. 03x/ 13x Phase : External
R1271 AEC ♡ 2030	3.6	30	42	1000	3.3,5.0 (Fix)		Built-in MOS-FET	Synchro-nous Rec-tification	Forced PWM	2000 (Fix)		–	–	-40	125	A	DFN3030-12B HSOP-18	Over Current Protection : Latch-type or Hiccup-type Soft-Start : External UVLO OVLO Thermal PG SSCG : Ver. xx1C/D
R1278 AEC ♡ 2030	3.6	30	36	2000	3.3 (Adj)	5.0 (Adj)	Built-in MOS-FET	Synchro-nous Rec-tification	Forced PWM	1800	2200	–	Yes	-40	125	A	HSOP-18	Over Current Protection : Hiccup-type Tracking function Soft-Start : External UVLO OVLO Thermal PG SSCG : Ver. 003C Phase : External
R1276 AEC ♡ 2030	3.6	30	36	3000	0.7 (Adj)	6.5 (Adj)	Built-in MOS-FET	Synchro-nous Rec-tification	Forced PWM, PWM/ VFM	250	1000	–	Yes	-40	125	A	HSOP-18	Over Current Protection : Hiccup-type Tracking function Soft-Start : External UVLO OVLO Thermal PG SSCG : Ver. 00xC Phase : External
RP550 AEC ♡	2.3	4.5 or 5.5	6.5	1000 × 2ch.	0.6 (Adj)	3.3 (Adj)	Built-in MOS-FET	Synchro-nous Rec-tification	Forced PWM, PWM/ VFM	2300 (Fix)		100	–	-40	105	A	DFN3030-12	2ch. Over Current Protection : Latch-type Soft-Start UVLO Thermal
RP506 AEC ♡	2.5	4.5 or 5.5	6.5	2000	0.8 (Fix) 0.6/ 0.8 (Adj)	3.3 (Fix) 4.0 (Adj)	Built-in MOS-FET	Synchro-nous Rec-tification	Forced PWM, PWM/ VFM	1200 (Fix) 2300 (Fix)		100	–	-40	105	A	DFN3030-12	Over Current Protection : Latch-type Soft-Start : External UVLO Thermal PG Discharge : Ver. H/L
RP510 AEC ♡	2.5	5.5	6.5	4000	0.8 (Fix/ Adj)	3.3 (Fix/ Adj)	Built-in MOS-FET	Synchro-nous Rec-tification	Forced PWM	2300 (Fix)		100	–	-40	105	A	DFN3030-12	Over Current Protection : Latch-type or Fold back-type Soft-Start : External UVLO Thermal PG Discharge : Ver. H/N

Power Supply

DC/DC(Boost Converter/SW.REG.)

Part No.	Input Voltage Range [V] min.	Input Voltage Range [V] max.	Absolute Max. Ratings [V]	Output Current [A]	Output Voltage Range [V] min.	Output Voltage Range [V] max.	SW. Device	SW. Control	Oscillation Frequency [kHz] min.	Oscillation Frequency [kHz] max.	Maximum Duty [%]	External Clock Synchronization	Operating Temp. Range [℃] min.	Operating Temp. Range [℃] max.	Automotive Quality Class	Package	key Features
NJW4132 ♡	4.55	40	45	1.75	4.55	38	Built-in MOS-FET	PWM	2000 (Fix)		80	Yes	-40	125	T1	SOT-89-5-2	PWM, External Clock Synchronization Over Current Protection (Hiccup type) Thermal Soft-Start UVLO Phase
NJW4133 AEC	3.0	40	45	5.0	3.0	38	Built-in MOS-FET	PWM	100	2400	92	Yes	-40	125	T1	HSOP8-M1	Over Current Protection (Hiccup type) Thermal Soft-Start OVP UVLO
NJW4140 ♡	3.0	40	45	–	3.0	–	Controller	PWM	40	1000	85	–	-40	125	T1	MSOP8 (VSP8)	Available for Fly-Back AEC=Z2 Pulse-by-pulse current limit circuit Soft-Start UVLO
NJW1871 AEC ♡	2.5	40	45	–	2.5	–	Controller	PWM	50	1000	87	Yes	-40	125	T1	MSOP10 (VSP10)	5.2V Gate Drive Available for Fly-Back RUN function Over Current Protection (Hiccup type) Thermal Soft-Start UVLO OVP
NJW4142 AEC ♡	2.5	40	45	–	2.5	–	Controller	PWM	50	1000	87	Yes	-40	125	T1	MSOP10 (VSP10)	10V Gate Drive Available for Fly-Back RUN function Over Current Protection (Hiccup type) Thermal Soft-Start UVLO OVP
U.D. NJW1871A AEC	4.5 (TBD)	40	45	–	4.5 (TBD)	–	Controller	PWM	1000	2000 (TBD)	(TBD)	Yes	-40	125	T1	MSOP10 (VSP10)	5.2V Gate Drive Available for Fly-Back RUN function Over Current Protection (Hiccup type) Thermal Soft-Start UVLO OVP

Voltage Detectors (VD), Watchdog Timers (WDT)

Part No.	Operating Voltage Range [V] min.	Operating Voltage Range [V] max.	Absolute Max. Ratings [V]	Detector Threshold Range [V] min.	Detector Threshold Range [V] max.	Detector Threshold Accuracy [%] Full Temp.	Release Delay Time	LDO	WDT	Supply Current [μA] typ.	Operating Temp. Range [℃] min.	Operating Temp. Range [℃] max.	Automotive Quality Class	Package	key Features
R5117 AEC ♡	3.5	42	50	BVD:3.5 SVD:2.5	BVD:12 SVD:5.0	BVD:-2 to 1 SVD:-1.25 to 0.75	Adjustable	Yes Io=500mA	–	35	-40	125	A	HSOP-8E HQFN0808-28	Voltage Regulator with Battery Voltage Detector Peak : 60V Thermal
R3152 AEC ♡	3.0	42	50	OV:1.1 UV:1.0	OV:5.9 UV:4.8	-1.25 to 0.75	Adjustable	–	–	1.5	-40	125	A	SOT-23-6	Window Voltage Detector SENSE Pin Detection
R5116 AEC ♡	3.5	42	50	OV:3.3 UV:2.5	OV:5.5 UV:5.0	-1.25 to 0.75	Adjustable	Yes Io=500mA	–	25	-40	125	A	HSOP-8E HQFN0808-28	Voltage Regulator with Window Voltage Detector Peak : 60V Thermal
R5112 AEC ♡	3.5	42	50	B:1.6 D:2.9	B:4.8 D:4.8	± 1.6	Adjustable	Yes Io=200mA	–	3.8	-40	125	A	HSOP-8E	Voltage Regulator with VD Peak : 60V Thermal
R5114 AEC ♡	3.5	42	50	2.5	4.8	± 1.6	Adjustable	Yes Io=250mA	Yes	8.5	-40	125	A	HSOP-8E HSOP-18 HQFN0808-28	Timeout WDT Peak : 60V Thermal
R5115 AEC ♡	3.5	42	50	2.5	4.8	± 1.6	Adjustable	Yes Io=250mA	Yes	8.5	-40	125	A	HSOP-8E HSOP-18 HQFN0808-28	Window WDT Peak : 60V Thermal
R3154 AEC ♡	3.0	42	50	OV:0.75 UV:0.55	OV:3.7 UV:3.3	-1.25 to 0.75	Adjustable	–	–	2	-40	125	R	SOT-23-6	Applicable to failure diagnosis Window Voltage Detector SENSE Pin Detection Type

Part No.	Operating Voltage Range [V] min.	Operating Voltage Range [V] max.	Absolute Max. Ratings [V]	Detector Threshold Range [V] min.	Detector Threshold Range [V] max.	Detector Threshold Accuracy [%] Full Temp.	Release Delay Time	LDO	WDT	Supply Current [μA] typ.	Operating Temp. Range [℃] min.	Operating Temp. Range [℃] max.	Automotive Quality Class	Package	key Features
U.D. NP4271 AEC	4.0	40	45	4.6 4.1	5.6	Low: ± 2.0 High: ± 5.0	Adjustable	Yes Io=500mA	Yes	120	-40	125	P	HSOP-8-AC	Window Voltage Detector
R3121xxxxA AEC ♡	1.4	36	50	3	12	-2.2 to 2.5	Adjustable	–	–	3.8	-40	125	A	SOT-23-6	VDD Pin Detection Type
R5110 AEC ♡	3.5	36	50	1.6	5.5	± 1.8	Adjustable	Yes Io=500mA	Yes	25	-40	125	A	HSOP-8E HSOP-18 HQFN0808-28	Timeout or Window WDT Peak : 60V Thermal Inrush
R5111 AEC ♡	3.5	36	50	1.6	5.5	± 1.8	Adjustable	Yes Io=300mA	Yes	25	-40	125	A	HSOP-8E HSOP-18 HQFN0808-28	Timeout or Window WDT Peak : 60V Thermal Inrush
R3121xxxxE AEC ♡	2.4	6	7	3	12	-2.2 to 2.5	Adjustable	–	–	3.5	-40	125	A	SOT-23-6	SENSE Pin Detection Type

RF Devices

RF Switches

Part No.	Function	P-0.2dB [dBm]	Insertion Less [dB]	Isolation [dB]	Frequency Range [GHz]	Automotive Quality Class	Package Size [mm]
NJG1802K51	SPDT	>36@0.9GHz >36@2.7GHz >36@5.9GHz	0.18@0.9GHz 0.23@2.7GHz 0.45@5.9GHz	50@0.9GHz 30@2.7GHz 20@5.9GHz	0.2 to 6	–	2.0x2.0x0.375
NJG1812AMET-A	DPDT	>36@0.9GHz >36@2.7GHz	0.25@0.9GHz 0.45@2.7GHz	25@0.9GHz 17@2.7GHz	0.2 to 3	A	2.0x2.0x0.78

Front-End Module

Part No.	Applications	Frequency Range [MHz]	Operating Voltage [V]	Operating Current [mA]	Gain [dB]	NF [dB]	Low Band Rejection [dBc]	High Band Rejection [dBc]	Automotive Quality Class	Package Size [mm]
NJG1159PHH-A	GPS	1575	2.8/1.8	3.7/3.0	16.0/15.5	1.50/1.55	55	43	A	1.5x1.1x0.5
	GLONASS	1597 to 1606			16.5/16.0	1.65/1.70				
	BeiDou	1559 to 1591			16.0/15.5	1.70/1.75				

(Note)Since they include products for general consumer use, please contact our sales office when you consider it.

Acoustic Vehicle Alerting System (AVAS)

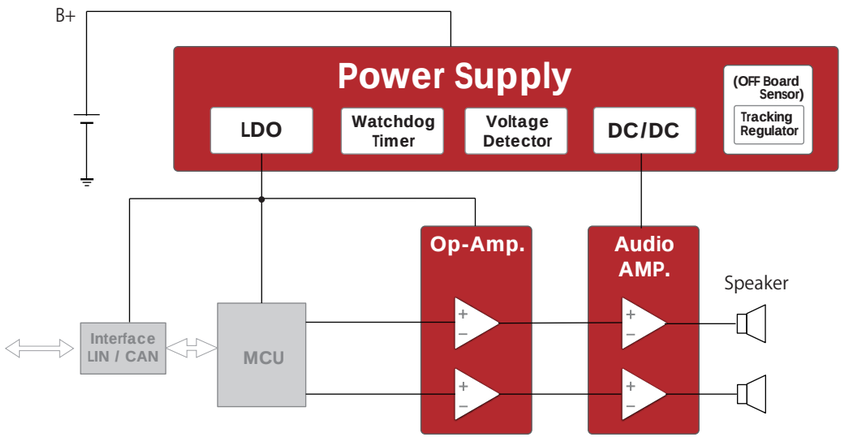

U.D. : Under development NEW : New product AEC : AEC-Q100 Compliant AEC : AEC-Q100 to be Compliant

♡ : Products available in PRODUCT LONGEVITY PROGRAM ♡ xxxx : Products available in PRODUCT LONGEVITY PROGRAM with time limit

Operational Amplifier (Op-Amp.)

Part No.	No. of Circuit	Power Supply	Supply Voltage [V]		Characteristics						Operating Temp. Range [℃]		Automotive Quality Class	Package
					V_{IO} [mV]		I_{CC} [mA]		SR[V/μs]					
			min.	max.	typ.	max.	typ.	max.	typ.		min.	max.		
NJM2904B AEC	2	Single	3	36	2	4	0.7	2	0.3		-40	125	T1	MSOP8(VSP8)
NJU77552 AEC	2	Single	2.2	5.5	1	6.5	0.1	0.122	0.8		-40	125	T1	MSOP8(VSP8)

Audio ICs

Class D Amplifiers

Part No.	Channel	Operating Voltage Range [V]		Output Power			Stand-by	Mute	Operating Temp. Range [℃]		Automotive Quality Class	Package
		min.	max.	Po	V+ [V]	RL [ohm]			min.	max.		
NJU8759A	BTL:1ch.	1.8	5.5	3.0W typ.	5	4	Yes	Yes	-40	105	T	HSOP8-M1

Power Supply

- Automatic : Automatic Shift to ECO Mode
- Manual : Manual Shift to ECO Mode
- Peak : Peak Voltage, Duration time=200ms
- Thermal : Thermal Shutdown Circuit
- Ripple : Ripple Rejection, Frequency = 1kHz
- Discharge : Auto-discharge Function
- Reverse : Reverse Current Protection Circuit
- Constant : Constant Slope Circuit
- High Immunity : Enhanced Noise Immunity
- Inrush : Inrush Current Limit Circuit
- Diode : Diode Rectification
- Soft-Start : Soft-start Circuit
- UVLO : Undervoltage Lockout Circuit
- OVLO : Overvoltage Lockout Circuit
- OVP : Overvoltage Protection Circuit
- Phase : Phase Compensation
- SSCG : Spectrum Diffusion Type Oscillator
- PG : Power Good Function
- Sequencing : Start-up Sequencing Control

LDO Regulators

Part No.	Input Voltage Range [V]		Absolute Max. Ratings [V]	Output Current [mA]	Output Voltage Range*1 [V]		Output Voltage Accuracy [%]	Supply Current [μA]	Operating Temp. Range [℃]		Automotive Quality Class	Package	key Features
	min.	max.			min.	max.	Full Temp.	typ.	min.	max.			
R1525 AEC ♡	3.5	42	50	200	1.8	12	± 1.6	2.2	-40	125	K	SOT-23-5 SOT-89-5 HSOP-6J HSOP-8E	Peak : 60V Thermal High Immunity
R5112 AEC ♡	3.5	42	50	200	1.8 VD B: 1.6 D: 2.9	5.0 VD B: 4.8 D: 4.8	± 1.6 VD: ± 1.6	3.8	-40	125	K	HSOP-8E	+VD(Voltage Detector) Peak : 60V Thermal
R5114 AEC ♡	3.5	42	50	250	3.3 VD: 2.5	5.0 VD: 4.8	± 1.6 VD: ± 1.6	8.5	-40	125	K	HSOP-8E HSOP-18 HQFN0808-28	Timeout WDT Peak : 60V Thermal

Part No.	Input Voltage Range [V]		Absolute Max. Ratings [V]	Output Current [mA]	Output Voltage Range*1 [V]		Output Voltage Accuracy [%]	Supply Current [μA]	Operating Temp. Range [℃]		Automotive Quality Class	Package	key Features
	min.	max.			min.	max.	Full Temp.	typ.	min.	max.			
R5115 AEC ♡	3.5	42	50	250	3.3 VD: 2.5	5.0 VD: 4.8	± 1.6 VD: ± 1.6	8.5	-40	125	K	HSOP-8E HSOP-18 HQFN0808-28	Window WDT Peak : 60V Thermal
R1526 AEC ♡	3.5	42	50	300	1.8	9	± 1.6	32	-40	125	K	HSOP-8E	Peak : 60V Ripple : 50dB(f=100Hz) Thermal High Immunity
R5116 AEC ♡	3.5	42	50	500	3.3 UV: 2.5 OV: 3.3	5.0 UV: 5.0 OV: 5.5	-1.25 to 0.75 UV: -1.25 to 0.75 OV: -1.25 to 0.75	25	-40	125	K	HSOP-8E HQFN0808-28	Built-in Window VD Released Hysteresis: 0.7% (Max.) Peak : 60V Thermal
R5117 AEC ♡	3.5	42	50	500	3.3 SVD: 2.5 BVD: 3.5	5.0 SVD:5.0 BVD: 12.0	-1.25 to 0.75 SVD:-1.25 to 0.75 BVD:-2.0 to 1.0	35	-40	125	K	HSOP-8E HQFN0808-28	Built-in Dual VD SVD Released Hysteresis: 0.7% (Max.) BVD Released Hysteresis: 5.0% (Max.) Peak : 60V Thermal
NJW4104 AEC	4.0	40	45	200	3.3	5.0	± 2.0	A ver.:5.5 B ver.:5.0	-40	125	T1	SOT-89-5-2 SOT-89-3	Ultra-low current consumption UVLO Thermal
NJW4107 AEC ♡	4.0	40	45	300	3.3	5.0	± 1.5	A ver.:75 B ver.:70	-40	125	T1	SOT-89-5-2 SOT-89-3	Fast Transient Response UVLO Thermal
NJW4105 AEC	4.0	40	45	500	3.3	8.0	± 1.5	65	-40	125	T1	TO-252-5-L5	Fast Transient Response Output voltage accuracy includes regulation Thermal
NJW4106 AEC	4.0	40	45	500	2.5	16	VADJ ± 2.0	65	-40	125	T1	TO-252-5-L5	Fast Transient Response Adjustable Type Output voltage accuracy includes regulation Thermal
U.D. NP4271 AEC	4.0	40	45	500	3.3	5.0	± 2.0	120	-40	125	P	HSOP-8-AC	WDT, Window VD
R1524 AEC ♡	3.5	36	50	200	1.8	12	± 1.6	2.2	-40	125	K	SOT-23-5 SOT-89-5 HSOP-6J HSOP-8E	Peak : 60V Thermal
R5111 AEC ♡	3.5	36	50	300	1.8 VD: 1.6	5.0 VD: 5.5	± 1.5 VD: ± 1.8	25	-40	125	K	HSOP-8E HSOP-18 HQFN0808-28	Timeout or Window WDT Peak : 60V Thermal Inrush
R1517 AEC ♡	3.5	36	50	500	2.5(Fix) 2.5(Adj)	9(Fix) 20(Adj)	± 1.8(Fix) ± 45mV(Adj)	18	-40	125	K	HSOP-6J TO-252-5-P2	Constant : External Adjustable Ver. E/F Peak : 60V Thermal Discharge : Ver. D/F
R5110 AEC ♡	3.5	36	50	500	1.8 VD: 1.6	5.0 VD: 5.5	± 1.5 VD: ± 1.8	25	-40	125	K	HSOP-8E HSOP-18 HQFN0808-28	Timeout or Window WDT Peak : 60V Thermal Inrush
R1518 AEC ♡	3.5	36	50	1000	2.5(Fix) 2.5(Adj)	9(Fix) 20(Adj)	± 1.8(Fix) ± 45mV(Adj)	18	-40	125	K	HSOP-6J TO-252-5-P2	Constant : External Adjustable Ver. E/F Peak : 60V Thermal Discharge : Ver. D/F
U.D. NJM11100 AEC	2.1	18	20	240	1.3	17	Vref ± 2.5	200	-40	125	T1	SOT-23-6-1	Ripple : 75dB(f=1kHz) Adjustable Type With Noise Bypass Pin Thermal Reverse
RP170 AEC ♡	2.6	10	12	300	1.2	6	± 3.0	23	-40	125	K	SOT-23-5 SOT-89-5	Ripple : 70dB Thermal Constant Discharge : Ver. D
NJM2879 AEC	2.3	6.5	7	200	5.1	5.0	± 2.0	150	-40	125	H	SOT-23-5	Discharge Thermal Reverse
NJM12884 AEC	2.3	6.5	7	500	5.1	5.0	± 2.0	200	-40	125	H	DFN8-WA (ESON8-WA)	Discharge Thermal Soft-Start Reverse
RP132 AEC ♡	1.4	6.5	7	1000	0.8(Fix) 0.8(Adj)	5(Fix) 5.5(Adj)	± 1.9(Fix) ± 29mV(Adj)	65	-40	105	J	SOT-89-5 HSOP-6J TO-252-5-P2	Ripple : 70dB Thermal Inrush Discharge : Ver. D

*1 Please refer to the product data sheet for the output voltage lineup.

Power Supply

LDO Regulators

Part No.	Input Voltage Range [V] min.	Input Voltage Range [V] max.	Absolute Max. Ratings [V]	Output Current [mA]	Output Voltage Range*1 [V] min.	Output Voltage Range*1 [V] max.	Output Voltage Accuracy [%] Full Temp.	Supply Current [μA] typ.	Operating Temp. Range [℃] min.	Operating Temp. Range [℃] max.	Automotive Quality Class	Package	key Features
NEW NR1640 AEC ♡	2.7	5.5	6.5	200	2.5	4.8	± 1.5	350	-40	125	P	SOT-23-5-DC	Outout noise : 6μVrms Ripple : 80dB(f=100kHz) Thermal Discharge
RP111 AEC ♡	1.4	5.25	6	500	0.7(Fix) 0.7(Adj)	3.4(Fix) 3.6(Adj)	± 1.5(Fix) ± 50mV(Adj)	80	-40	105	J	SOT-23-5 SOT-89-5 HSOP-6J	Load regulation: Typ. 1mV Load transient response accuracy: Typ. -75mV/+45mV, 1mA ⇔ 250mA (1/2 IOUT (Max.)) Ripple : 75dB Thermal Inrush Discharge : Ver. D

*1 Please refer to the product data sheet for the output voltage lineup.

Tracking Regulators

Part No.	Operating Voltage Range [V] min.	Operating Voltage Range [V] max.	Absolute Max. Ratings [V]	Output Current [mA]	Output Voltage Range [V] min.	Output Voltage Range [V] max.	Output Voltage Accuracy [mV] Full Temp.	Supply Current [μA] typ.	Operating Temp. Range[℃] min.	Operating Temp. Range[℃] max.	Automotive Quality Class	Package	key Features
R1540 AEC ♡	3.5	42	50	70	2.2	14	± 15	60	-40	125	K	SOT-23-5 HSOP-8E	Foldback Protection Circuit Ripple : 80dB (f=100Hz) Thermal High Immunity
U.D. NR4250 AEC	4	40	45	50	2.5	36	± 10	40	-40	125	P	SOT-23-5-DC	Overcurrent Protection Ripple : 80dB (f=100Hz) Thermal High Immunity
U.D. NR4254 AEC	4	40	45	70	2.5	36	± 5	40	-40	125	P	SOT-89-5-DF	Output Voltage Accuracy: at VADJ/EN=5V Overcurrent Protection Ripple : 80dB (f=100Hz) Thermal High Immunity
U.D. NR4252 AEC	4	40	45	250	1.5	36	± 10	45	-40	125	P	SOT-89-5-DF	Overcurrent Protection Ripple : 80dB (f=100Hz) Thermal High Immunity

DC/DC(Buck Converter/SW.REG.)

Part No.	Input Voltage Range [V] min.	Input Voltage Range [V] max.	Absolute Max. Ratings [V]	Output Current [mA]	Output Voltage Range [V] min.	Output Voltage Range [V] max.	SW. Device	Rectification	SW. Control	Oscillation Frequency [kHz] min.	Oscillation Frequency [kHz] max.	Maximum Duty [%]	External Clock Synchronization	Operating Temp. Range [℃] min.	Operating Temp. Range [℃] max.	Automotive Quality Class	Package	key Features
U.D. NC2905 AEC	4.0	75	80	1500	TBD	TBD	Built-in MOS-FET	Diode Rectification	PWM	100	2400	100	Yes	-40	125	P	HSOP-8-AC	Over Current Protection (Hiccup type) Thermal Soft-Start UVLO SSCG Phase : External PG
NEW R1260 AEC ♡	5.0	60	80	–	1 (Adj)	16 (Adj)	Controller	Synchronous Rectification	Forced PWM, PWM/ VFM	150	600	–	Yes	-40	125	K	HSOP-18	Over Current Protection : Latch-type or Hiccup-type Tracking function Soft-Start : External Adjustable UVLO OVLO Thermal SSCG : Ver. xxxB/D PG Phase : External
U.D. NJW4175 AEC	3.4	40	45	600	0.8	26	Built-in MOS-FET	Synchronous Rectification	PWM/ PFM	2100(Fix)		100	Yes	-40	125	T1	HSOP8-M1	Light Load Mode Over Current Protection (Hiccup type) Soft-Start Phase : Internal PG
NJW4171 AEC	3.4	40	45	2500	0.8	38	Built-in MOS-FET	Diode Rectification	PWM/ PFM(A) PWM(B)	100	2400	100	Yes	-40	125	T1	HSOP8-M1	Light Load Mode(A ver.) External Clock Synchronization Over Current Protection (Hiccup type) Thermal Soft-Start UVLO Phase : External PG

Part No.	Input Voltage Range [V] min.	Input Voltage Range [V] max.	Absolute Max. Ratings [V]	Output Current [mA]	Output Voltage Range [V] min.	Output Voltage Range [V] max.	SW. Device	Rectification	SW. Control	Oscillation Frequency [kHz] min.	Oscillation Frequency [kHz] max.	Maximum Duty [%]	External Clock Synchronization	Operating Temp. Range [℃] min.	Operating Temp. Range [℃] max.	Automotive Quality Class	Package	key Features
NJW4154	4.5	40	45	3000	0.8	35.2	Built-in MOS-FET	Diode Rectification	PWM	300 (External Clock Synchronization)		88	Yes	-40	125	T1	HSOP8-M1	Over Current Protection (Hiccup type) Thermal Soft-Start UVLO Phase :Internal PG
R1271 AEC ♡ 2030	3.6	30	42	1000	3.3,5.0 (Fix)		Built-in MOS-FET	Synchronous Rectification	Forced PWM	2000 (Fix)		–	–	-40	125	K	DFN3030-12B HSOP-18	Over Current Protection : Latch-type or Hiccup-type Soft-Start : External Adjustable UVLO OVLO Thermal SSCG : Ver. xx1C/D PG
R1278 AEC ♡ 2030	3.6	30	36	2000	3.3 (Adj)	5.0 (Adj)	Built-in MOS-FET	Synchronous Rectification	Forced PWM	1800	2200	–	Yes	-40	125	K	HSOP-18	Over Current Protection : Hiccup-type Tracking function Soft-Start : External Adjustable UVLO OVLO Thermal SSCG : Ver. 003C PG Phase : External
R1276 AEC ♡ 2030	3.6	30	36	3000	0.7 (Adj)	6.5 (Adj)	Built-in MOS-FET	Synchronous Rectification	Forced PWM, PWM/ VFM	250	1000	–	Yes	-40	125	K	HSOP-18	Over Current Protection : Hiccup-type Tracking function Soft-Start : External Adjustable UVLO OVLO Thermal SSCG : Ver. 00xC PG Phase : External

Voltage Detectors (VD), Watchdog Timers (WDT)

Part No.	Operating Voltage Range [V] min.	Operating Voltage Range [V] max.	Absolute Max. Ratings [V]	Detector Threshold Range [V] min.	Detector Threshold Range [V] max.	Detector Threshold Accuracy [%] Full Temp.	Release Delay Time	LDO	WDT	Supply Current [μA] typ.	Operating Temp. Range [℃] min.	Operating Temp. Range [℃] max.	Automotive Quality Class	Package	key Features
R5117 AEC ♡	3.5	42	50	BVD:3.5 SVD:2.5	BVD:12 SVD:5.0	BVD:-2 to 1 SVD:-1.25 to 0.75	Adjustable	Yes Io= 500mA	–	35	-40	125	K	HSOP-8E HQFN0808-28	Voltage Regulator with Battery Voltage Detector Peak : 60V Thermal
R3152 AEC ♡	3.0	42	50	OV:1.1 UV:1.0	OV:5.9 UV:4.8	-1.25 to 0.75	Adjustable	–	–	1.5	-40	125	K	SOT-23-6	Window Voltage Detector SENSE Pin Detection
R5116 AEC ♡	3.5	42	50	OV:3.3 UV:2.5	OV:5.5 UV:5.0	-1.25 to 0.75	Adjustable	Yes Io= 500mA	–	25	-40	125	K	HSOP-8E HQFN0808-28	Voltage Regulator with Window Voltage Detector Peak : 60V Thermal
R5112 AEC ♡	3.5	42	50	B:1.6 D:2.9	B:4.8 D:4.8	± 1.6	Adjustable	Yes Io= 200mA	–	3.8	-40	125	K	HSOP-8E	Voltage Regulator with VD Peak : 60V Thermal
R5114 AEC ♡	3.5	42	50	2.5	4.8	± 1.6	Adjustable	Yes Io= 250mA	Yes	8.5	-40	125	K	HSOP-8E HSOP-18 HQFN0808-28	Timeout WDT Peak : 60V Thermal
R5115 AEC ♡	3.5	42	50	2.5	4.8	± 1.6	Adjustable	Yes Io= 250mA	Yes	8.5	-40	125	K	HSOP-8E HSOP-18 HQFN0808-28	Window WDT Peak : 60V Thermal
R3154 AEC ♡	3.0	42	50	OV:0.75 UV:0.55	OV:3.7 UV:3.3	-1.25 to 0.75	Adjustable	–	–	2	-40	125	R	SOT-23-6	Applicable to failure diagnosis Window Voltage Detector SENSE Pin Detection Type
U.D. NP4271 AEC	4.0	40	45	4.6 4.1	5.6	Low: ± 2.0 High: ± 5.0	Adjustable	Yes Io= 500mA	Yes	120	-40	125	P	HSOP-8-AC	Window Voltage Detector
R3121xxxxA AEC ♡	1.4	36	50	3	12	-2.2 to 2.5	Adjustable	–	–	3.8	-40	125	K	SOT-23-6	VDD Pin Detection Type
R5110 AEC ♡	3.5	36	50	1.6	5.5	± 1.8	Adjustable	Yes Io= 500mA	Yes	25	-40	125	K	HSOP-8E HSOP-18 HQFN0808-28	Timeout or Window WDT Peak : 60V Thermal Inrush
R5111 AEC ♡	3.5	36	50	1.6	5.5	± 1.8	Adjustable	Yes Io= 300mA	Yes	25	-40	125	K	HSOP-8E HSOP-18 HQFN0808-28	Timeout or Window WDT Peak : 60V Thermal Inrush
R3121xxxxE AEC ♡	2.4	6	7	3	12	-2.2 to 2.5	Adjustable	–	–	3.5	-40	125	K	SOT-23-6	SENSE Pin Detection Type

Operational Amplifier (Op-Amp.)

Part No.	No. of Circuit	Power Supply	Supply Voltage [V]		Characteristics					Operating Temp. Range [℃]		Automotive Quality Class	Package	Note
					V_{IO} [mV]		I_{CC} [mA]		SR [V/μs]					
			min.	max.	typ.	max.	typ.	max.	typ.	min.	max.			
MUSES8920	2	Dual	± 3.5	± 17	0.8	5	9	12	25	-40	125	–	DIP8, SOP8 JEDEC 150mil(EMP8), ESON8-X7	
NJM2904B AEC	2	Single	3	36	2	4	0.7	2	0.3	-40	125	T1, Z2	MSOP8(VSP8)	AEC=T1
NJM8080	2	Dual	± 2	± 18	0.3	3	6	9	5	-40	125	–	SSOP8, SOP8, MSOP8(TVSP8)	
NEW NJM8087	2	Dual	± 4	± 16	0.1	0.8	2.6	3.0	20	-40	125	–	SOP8 JEDEC 150mil(EMP8)	
NJM8208 ♡	2	Single	3	35	0.15	1	0.9	1.4	0.2	-40	125	Z	MSOP8(VSP8)	
NJM8532	2	Single	1.8	14	1	5	0.58	0.9	0.4	-40	125	T1	MSOP8(VSP8)	
NJM8532 AEC ♡	2	Single	1.8	14	1	5	0.58	0.9	0.4	-40	125	Z	MSOP8(VSP8)	
NJU7046 ♡	1	Single	2.7	5.5	0.9	5	1.4	2.2	9	-40	125	T1	SOT-23-5	
NJU7047 ♡	2	Single	2.7	5.5	0.9	5	2.7	4.5	9	-40	125	T1	MSOP8(TVSP8)	
NJU7057 ♡	2	Single	1.8	5.5	0.8	4	0.52	0.84	0.8	-40	125	T1	MSOP8(TVSP8)	
NJU7077 ♡	2	Single	2.2	5.5	0.02	0.4	1.2	1.8	0.5	-40	125	Z	MSOP8(VSP8)	
NJU77552 AEC	2	Single	2.2	5.5	1	6.5	0.1	0.122	0.8	-40	125	T1	MSOP8(VSP8)	
NJU77701 ♡	1	Single	2.4	5.5	0.4	1.8	3.8	4.8	35	-40	125	T1	SOT-23-5	

Comparator

Part No.	No. of Circuit	Power Supply	Supply Voltage [V]		Characteristics					Operating Temp. Range [℃]		Automotive Quality Class	Package	Note
					V_{IO} [mV]		I_{CC} [mA]		Propagation Delay [μs]					
			min.	max.	typ.	max.	typ.	max.	typ.	min.	max.			
NJM2903 ♡	2	Single	2	36	2	5	0.4	2	1.5	-40	125	T1, Z2	MSOP8(VSP8)	
NJU77242 AEC	2	Single	1.8	5.5	1	7	0.015	0.025	1.25	-40	125	T1, Z2	MSOP8(VSP8)	AEC=Z2

Power Supply

- Automatic : Automatic Shift to ECO Mode
- Manual : Manual Shift to ECO Mode
- Peak : Peak Voltage, Duration time=200ms
- Thermal : Thermal Shutdown Circuit
- Ripple : Ripple Rejection, Frequency = 1kHz
- Discharge : Auto-discharge Function
- Reverse : Reverse Current Protection Circuit
- Constant : Constant Slope Circuit
- High Immunity : Enhanced Noise Immunity
- Inrush : Inrush Current Limit Circuit
- Diode : Diode Rectification
- Soft-Start : Soft-start Circuit
- UVLO : Undervoltage Lockout Circuit
- OVLO : Overvoltage Lockout Circuit
- OVP : Overvoltage Protection Circuit
- Phase : Phase Compensation
- SSCG : Spectrum Diffusion Type Oscillator
- PG : Power Good Function
- Sequencing : Start-up Sequencing Control

LDO Regulators

Part No.	Input Voltage Range [V]		Absolute Max. Ratings [V]	Output Current [mA]	Output Voltage Range*1 [V]		Output Voltage Accuracy [%]	Supply Current [μA]	Operating Temp. Range [℃]		Automotive Quality Class	Package	key Features
	min.	max.			min.	max.	Full Temp.	typ.	min.	max.			
High - Voltage (Maximum Input Voltage >30V)													
R1560 AEC ♡	5.5	60	80	100	1.8	14	± 1.5	3	-40	125	K/A	HSOP-6J TO-252-5-P2	Peak : 90V Thermal
R1561 AEC ♡	5.5	60	80	100	1.8	14	± 1.5	20	-40	125	K/A	HSOP-6J TO-252-5-P2	Peak : 90V Thermal
R1525 AEC ♡	3.5	42	50	200	1.8	12	± 1.6	2.2	-40	125	K/A	SOT-23-5 SOT-89-5 HSOP-6J HSOP-8E	Peak : 60V Thermal High Immunity
R5112 AEC ♡	3.5	42	50	200	1.8 VD B: 1.6 D: 2.9	5.0 VD B: 4.8 D: 4.8	± 1.6 VD: ± 1.6	3.8	-40	125	K/A	HSOP-8E	+VD(Voltage Detector) Peak : 60V Thermal
R5114 AEC ♡	3.5	42	50	250	3.3 VD: 2.5	5.0 VD: 4.8	± 1.6 VD: ± 1.6	8.5	-40	125	K/A	HSOP-8E HSOP-18 HQFN0808-28	PLP♡: HSOP-8E, HSOP-18 Timeout WDT Peak : 60V Thermal
R5115 AEC ♡	3.5	42	50	250	3.3 VD: 2.5	5.0 VD: 4.8	± 1.6 VD: ± 1.6	8.5	-40	125	K/A	HSOP-8E HSOP-18 HQFN0808-28	PLP♡: HSOP-8E, HSOP-18 Window WDT Peak : 60V Thermal

Part No.	Input Voltage Range [V]		Absolute Max. Ratings [V]	Output Current [mA]	Output Voltage Range*1 [V]		Output Voltage Accuracy [%]	Supply Current [μA]	Operating Temp. Range [℃]		Auto-motive Quality Class	Package	key Features
	min.	max.			min.	max.	Full Temp.	typ.	min.	max.			
R1526 AEC ♡	3.5	42	50	300	1.8	9	± 1.6	32	-40	125	K/A	HSOP-8E	Peak : 60V Ripple : 50dB(f=100Hz) Thermal High Immunity
R5116 AEC ♡	3.5	42	50	500	3.3 UV: 2.5 OV: 3.3	5.0 UV: 5.0 OV: 5.5	-1.25 to 0.75 UV: -1.25 to 0.75 OV: -1.25 to 0.75	25	-40	125	K/A	HSOP-8E HQFN0808-28	PLP♡: HSOP-8E Built-in Window VD Released Hysteresis: 0.7% (Max.) Peak : 60V Thermal
R5117 AEC ♡	3.5	42	50	500	3.3 SVD: 2.5 BVD: 3.5	5.0 SVD: 5.0 BVD: 12.0	-1.25 to 0.75 SVD:-1.25 to 0.75 BVD:-2.0 to 1.0	35	-40	125	K/A	HSOP-8E HQFN0808-28	PLP♡: HSOP-8E Built-in Dual VD SVD Released Hysteresis: 0.7% (Max.) BVD Released Hysteresis: 5.0% (Max.) Peak : 60V Thermal
NJW4182 AEC	4.0	40	45	100	3.3	5.0	± 3.0	9	-40	125	H	SOT-23-5	Ultra-low current consumption Thermal
NJW4182 ♡	4.0	40	45	100	3.3	5.0	± 3.0	9	-40	125	T1	SOT-23-5	Ultra-low current consumption Thermal
NJW4104 AEC	4.0	40	45	200	3.3	5.0	± 2.0	A ver.:5.5 B ver.:5.0	-40	125	T1	SOT-89-5-2 SOT-89-3	Ultra-low current consumption UVLO Thermal
NJW4107 AEC ♡	4.0	40	45	300	3.3	5.0	± 1.5	A ver.:75 B ver.:70	-40	125	T1	SOT-89-5-2 SOT-89-3	Fast Transient Response UVLO Thermal
NJW4105 AEC	4.0	40	45	500	3.3	8.0	± 1.5	65	-40	125	T1	TO-252-5-L5	Fast Transient Response Output voltage accuracy includes regulation Thermal
NJW4106 AEC	4.0	40	45	500	2.5	16	VADJ ± 2.0	65	-40	125	T1	TO-252-5-L5	Fast Transient Response Adjustable Type Output voltage accuracy includes regulation Thermal
U.D. NP4271 AEC	4.0	40	45	500	3.3	5.0	± 2.0	120	-40	125	P	HSOP-8-AC	WDT, Window VD
R8151 AEC ♡	4.0	36	50	50	2	12	± 4.0	9	-40	110	R8	SOT-89-5 HSOP-6J	Peak : 60V Thermal
R1515 AEC ♡	4.0	36	50	50	2	12	± 3.0	9	-40	105	J/A	SOT-89-5 HSOP-6J	Peak : 60V Thermal
R1514 AEC ♡	4.0	36	50	150	2	12	± 3.0	9	-40	105	J/A	SOT-89-5 HSOP-6J	Peak : 60V Thermal
R8150 AEC ♡	4.0	36	50	150	2	12	± 4.0 (Ta=-40 to 110℃)	9	-40	125	R8	HSOP-6J	Peak : 60V Thermal
R1516 AEC ♡	4.0	36	50	150	1.8	6.2	± 2.0	29	-40	105	J/A	SOT-89-5 HSOP-6J	Peak : 60V Thermal
R1524 AEC ♡	3.5	36	50	200	1.8	12	± 1.6	2.2	-40	125	K/A	SOT-23-5 SOT-89-5 HSOP-6J HSOP-8E	Peak : 60V Thermal
R8160 AEC ♡	3.5	36	50	200	3.3	9	± 1.6	2.2	-40	125	R8	SOT-23-5 SOT-89-5 HSOP-6J	Peak : 60V Thermal
R1510 ♡	3.5	36	50	300	2.5 VD A/B/C: 2.3 D: 2.3	12.0 VD A/B/C:12.0 D: 10.6	± 4.5 VD: ± 3.2	12.5	-40	105	J/A	HSOP-8E	Built-in Voltage Detector A: VIN detect (Normal type) B: SENSE detect (Normal type) C: VIN detect (with delay function) D: VOUT detect (with delay function) Automatic Thermal
R1513 AEC ♡	3.5	36	50	300	1.2(Fix) 1.2(Adj)	5(Fix) 18(Adj)	± 1	75	-40	125	K/A	HSOP-6J	Ripple : 70dB(f=100Hz) Peak : 60V Thermal Discharge : Ver. D
R8156 AEC ♡	3.5	3.6	50	300	1.2(Fix) 1.2(Adj)	5(Fix) 18(Adj)	± 1.0	75	-40	125	R8	HSOP-8E	Ripple : 70dB(f=100Hz) Peak : 60V Thermal Discharge : Ver. D
R1511 AEC ♡	3.5	36	50	300	3.0(Fix) 3.0(Adj)	9.0(Fix) 12.0(Adj)	± 2.0(Fix) ± 60mV(Adj)	100	-40	125	K/A	HSOP-6J TO-252-5-P2	Peak : 60V Thermal
R8153 AEC ♡	3.5	36	50	300	3(Fix) 3(Adj)	9(Fix) 12(Adj)	± 2.0(Fix) ± 60mV(Adj)	100	-40	125	R8	HSOP-6J TO-252-5-P2	Peak : 60V Thermal

Power Supply

LDO Regulators

Part No.	Input Voltage Range [V] min.	Input Voltage Range [V] max.	Absolute Max. Ratings [V]	Output Current [mA]	Output Voltage Range*1 [V] min.	Output Voltage Range*1 [V] max.	Output Voltage Accuracy [%] Full Temp.	Supply Current [μA] typ.	Operating Temp. Range [℃] min.	Operating Temp. Range [℃] max.	Automotive Quality Class	Package	key Features
R5111 AEC ♡	3.5	36	50	300	1.8 VD: 1.6	5.0 VD: 5.5	± 1.5 VD: ± 1.8	25	-40	125	K/A	HSOP-8E HSOP-18 HQFN0808-28	Timeout or Window WDT Peak : 60V Thermal Inrush
R1517 AEC ♡	3.5	36	50	500	2.5(Fix) 2.5(Adj)	9(Fix) 20(Adj)	± 1.8(Fix) ± 45mV(Adj)	18	-40	125	K/A	HSOP-6J TO-252-5-P2	Constant : External Adjustable Ver. E/F Peak : 60V Thermal Discharge : Ver. D/F
R8154 AEC ♡	3.5	36	50	500	2.5(Fix) 2.5(Adj)	9(Fix) 12(Adj)	± 1.8(Fix) ± 45mV(Adj)	18	-40	125	R8	HSOP-6J TO-252-5-P2	Constant : External Adjustable Ver. E/F Peak : 60V Thermal Discharge : Ver. D/F
R5110 AEC ♡	3.5	36	50	500	1.8 VD: 1.6	5.0 VD: 5.5	± 1.5 VD: ± 1.8	25	-40	125	K/A	HSOP-8E HSOP-18 HQFN0808-28	Timeout or Window WDT Peak : 60V Thermal Inrush
R8360 AEC ♡	3.5	36	50	500	1.8 VD: 1.6	5.0 VD: 5.5	± 1.5 VD: ± 1.8	25	-40	125	R8	HSOP-8E HSOP-18	Timeout or Window WDT Peak : 60V Thermal Inrush
R1518 AEC ♡	3.5	36	50	1000	2.5(Fix) 2.5(Adj)	9(Fix) 20(Adj)	± 1.8(Fix) ± 45mV(Adj)	18	-40	125	K/A	HSOP-6J TO-252-5-P2	Constant : External Adjustable Ver. E/F Peak : 60V Thermal Discharge : Ver. D/F
R8155 AEC ♡	3.5	36	50	1000	2.5(Fix) 2.5(Adj)	9(Fix) 12(Adj)	± 1.8(Fix) ± 45mV(Adj)	18	-40	125	R8	HSOP-6J TO-252-5-P2	Constant : External Adjustable Ver. E/F Peak : 60V Thermal Discharge : Ver. D/F
Middle - Voltage (Maximum Input Voltage 6.5V to 30V)													
R1150 AEC ♡	-	24	26	150	2.1 VD A: 2.3 B/C/D: 2.0	14.0 VD A: 15.0 B/C/D:15.0	± 2.0 VD: ± 2.5 (Ta=25℃)	7	-40	85	H/A	SOT-89-5	Built-in Voltage Detector A: VIN detect (Normal type) B: SENSE detect (Normal type) C: VIN detect (with delay function) D: VOUT detect (with delay function) Thermal
R1500 AEC ♡	4.0	24	36	500	3	12	± 3.5	70	-40	105	J/A	SOT-89-5	Thermal
R1501 AEC ♡	3	24	36	1000	3	18	± 3.5	70	-40	105	J/A	HSOP-6J TO-252-5-P2	Thermal
R8152 AEC ♡	3.0	24	36	1000	3	18	± 4.0 (Ta=-40 to 110℃)	70	-40	125	R8	HSOP-6J TO-252-5-P2	Thermal
U.D. NJM11100 AEC	2.1	18	20	240	1.3	17	Vref ± 2.5	200	-40	125	T1	SOT-23-6-1	Ripple : 75dB(f=1kHz) Adjustable Type With Noise Bypass Pin Thermal Reverse
R1191 AEC ♡	3.5	16	18	300	2	15	± 2.5	6	-40	85	A	SOT-23-5 SOT-89-5	Ripple : 70dB Thermal Reverse Manual Discharge : Ver. D
R1190 AEC ♡	3.5	16	18	1000	2	12	± 2.7	150	-40	85	A	HSOP-6J TO-252-5-P2	AEC-Q100=HSOP-6J Inrush : External Adjustable Thermal Discharge : Ver. D
RP171 AEC ♡	2.6	10	12	150	1.2	6	-3.5 to 3	23	-40	105	J/A	SOT-23-5	Ripple : 70dB Thermal Constant Discharge : Ver. D
RP170 AEC ♡	2.6	10	12	300	1.2	6	± 3.0	23	-40	A: 105 K: 125	K/A	SOT-23-5 SOT-89-5	Ripple : 70dB Thermal Constant Discharge : Ver. D
R1130 ♡ 2029	2.5	8	9	300	1.5(Fix) 1.8(Adj)	5.0(Fix) 5.0(Adj)	± 2.0(Fix) ± 36mV(Adj) (Ta=25℃)	50	-40	85	H	SOT-89-5	Absolute Max. Ratings : IOUT=450mA
NJM2815	5.5	8.0	10	1500	5.1	5.15	± 1.0	980	-40	85	-	HSOP8-M1	Built-in Output Voltage Correction Thermal
NJM2816	5.5	8.0	10	1800	5.1	5.15	± 1.0	1150	-40	85	-	HSOP8-M1	Built-in Output Voltage Correction Thermal
NJM2879 AEC	2.3	6.5	7	200	5.1	5.0	± 2.0	150	-40	125	H	SOT-23-5	Discharge Thermal Reverse

Part No.	Input Voltage Range [V] min.	Input Voltage Range [V] max.	Absolute Max. Ratings [V]	Output Current [mA]	Output Voltage Range*1 [V] min.	Output Voltage Range*1 [V] max.	Output Voltage Accuracy [%] Full Temp.	Supply Current [μA] typ.	Operating Temp. Range [℃] min.	Operating Temp. Range [℃] max.	Automotive Quality Class	Package	key Features
NJM12884 AEC	2.3	6.5	7	500	5.1	5.0	± 2.0	200	-40	125	H	DFN8-WA (ESON8-WA)	Discharge Thermal Soft-Start Reverse
RP130 AEC ♡	1.7	6.5	7	150	1.2	5	± 1.5	38	-40	105	A	DFN1212-4 SOT-23-5	Ripple : 80dB Discharge : Ver. D
RP132 AEC ♡	1.4	6.5	7	1000	0.8(Fix) 0.8(Adj)	5(Fix) 5.5(Adj)	± 1.9(Fix) ± 29mV(Adj)	65	-40	105	J/A	SOT-89-5 HSOP-6J TO-252-5-P2	Ripple : 70dB Thermal Inrush Discharge : Ver. D
Low-Voltage (Maximum Input Voltage <6.5V)													
R1180 AEC ♡	1.7	6	6.5	150	1.2	3.6	± 2.0 (Ta=25℃)	1	-40	85	H/A	SOT-23-5	Low Supply Current
R1163 ♡ 2029	2.0	6	6.5	150	1.5	5	± 1.5 (Ta=25℃)	6	-40	85	A	SOT-23-5	Ripple : 70dB Reverse Manual Discharge : Ver. D
R1114 ♡ 2029	2.0	6	6.5	150	1.5	4	± 2.0 (Ta=25℃)	75	-40	85	A	SOT-23-5	Ripple : 70dB Discharge : Ver. D
R1170 ♡ 2029	2.1	6	7	800	1.5	5	± 2.0 (Ta=25℃)	80	-40	85	H/A	SOT-89-5	Thermal
R1172 ♡	1.4	6	6.5	1000	0.8	5	± 2.0 (Ta=25℃)	60	-40	85	H/A	SOT-23-5 SOT-89-5 HSOP-6J	Ripple : 70dB Thermal Inrush Discharge : Ver. D
R1171 ♡	2.1	6	7	1500	1.5	5	± 2.0 (Ta=25℃)	130	-40	85	A	HSOP-6J	Thermal
NEW NR1640 AEC ♡	2.7	5.5	6.5	200	2.5	4.8	± 1.5	350	-40	125	P/Q	SOT-23-5-DC	Outout noise : 6μVrms Ripple : **80dB(f=100kHz)** Thermal Discharge
RP154 AEC ♡	1.4	5.25	6	300	0.8	3.7	± 3.0	50	-40	105	A	DFN2020-8 SOT-23-6	2ch. Ripple : 75dB Discharge : Ver. B
RP111 AEC ♡	1.4	5.25	6	500	0.7(Fix) 0.7(Adj)	3.4(Fix) 3.6(Adj)	± 1.5(Fix) ± 50mV(Adj)	80	-40	105	J/A	SOT-23-5 SOT-89-5 HSOP-6J	Load regulation: Typ. 1mV Load transient response accuracy: Typ. -75mV/+45mV, 1mA ⇔ 250mA (1/2 IOUT (Max.)) Ripple : 75dB Thermal Inrush Discharge : Ver. D
RP115 AEC ♡	1.4	5.25	6	500 1000	0.9	3.9	-1.9 to 1.5	110	-40	105	A	DFN2020-8B SOT-89-5	Load regulation: Typ. 1mV Temperature Characteristics : Typ. ± 30ppm/℃ Ripple : 75dB,80dB(VSET ≦ 1.8V) Thermal Reverse Constant Inrush Discharge : Ver. D
RP108 AEC ♡	1.6	5.25	6	3000	0.8(Fix) 0.8(Adj)	3.3(Fix) 4.2(Adj)	-3 to 2.4	350	-40	105	A	TO-252-5-P2	Thermal Reverse Constant Discharge : Ver. D/F

*1 Please refer to the product data sheet for the output voltage lineup.

Tracking Regulators

Part No.	Operating Voltage Range [V] min.	Operating Voltage Range [V] max.	Absolute Max. Ratings [V]	Output Current [mA]	Output Voltage Range [V] min.	Output Voltage Range [V] max.	Output Voltage Accuracy [mV] Full Temp.	Supply Current [μA] typ.	Operating Temp. Range [℃] min.	Operating Temp. Range [℃] max.	Automotive Quality Class	Package	key Features
R1540 AEC ♡	3.5	42	50	70	2.2	14	± 15	60	-40	125	K/A	SOT-23-5 HSOP-8E	Foldback Protection Circuit Ripple : 80dB (f=100Hz) Thermal High Immunity
U.D. NR4250 AEC	4	40	45	50	2.5	36	± 10	40	-40	125	P	SOT-23-5-DC	Overcurrent Protection Ripple : 80dB (f=100Hz) Thermal High Immunity
U.D. NR4254 AEC	4	40	45	70	2.5	36	± 5	40	-40	125	P	SOT-89-5-DF	Output Voltage Accuracy: at VADJ/EN=5V Overcurrent Protection Ripple : 80dB (f=100Hz) Thermal High Immunity
U.D. NR4252 AEC	4	40	45	250	1.5	36	± 10	45	-40	125	P	SOT-89-5-DF	Overcurrent Protection Ripple : 80dB (f=100Hz) Thermal High Immunity

Power Supply

DC/DC(Buck Converter/SW.REG.)

Part No.	Input Voltage Range [V]		Absolute Max. Ratings [V]	Output Current [mA]	Output Voltage Range [V]		SW. Device	Rectification	SW. Control	Oscillation Frequency [kHz]		Maximum Duty [%]	External Clock Synchronization	Operating Temp. Range [℃]		Automotive Quality Class	Package	key Features
	min.	max.			min.	max.				min.	max.			min.	max.			
U.D. NC2905 AEC	4.0	75	80	1500	TBD	TBD	Built-in MOS-FET	Diode Rectification	PWM	100	2400	100	Yes	-40	125	P	HSOP-8-AC	Over Current Protection (Hiccup type) Thermal Soft-Start UVLO SSCG Phase : External PG
NEW R1260 AEC ♡	5.0	60	80	–	1(Adj)	16(Adj)	Controller	Synchronous Rectification	Forced PWM, PWM/VFM	150	600	–	Yes	-40	125	K/A	HSOP-18	Over Current Protection : Latch-type or Hiccup-type Tracking function Soft-Start : External Adjustable UVLO OVLO Thermal SSCG : Ver. xxxB/D PG Phase : External
NJW4152BA	4.4	40	45	600	0.8	38	Built-in MOS-FET	Diode Rectification	PWM	300	1000	100	–	-40	125	Z	MSOP8 (VSP8)	Pulse-by-pulse current limit circuit Thermal Soft-Start UVLO Phase : External
U.D. NJW4175 AEC	3.4	40	45	600	0.8	26	Built-in MOS-FET	Synchronous Rectification	PWM/PFM	2100 (Fix)		100	Yes	-40	125	T1	HSOP8-M1	Light Load Mode Over Current Protection (Hiccup type) Soft-Start Phase : Internal PG
NJW4119	6.5	40	45	2400	5.1	5.185	Built-in MOS-FET	Diode Rectification	PWM	300 (Fix)		92	Yes	-40	125	–	HTSSOP24-P1	For USB charger Over Current Protection (Hiccup type) Thermal Soft-Start UVLO PG Phase : External
NJW4171 AEC	3.4	40	45	2500	0.8	38	Built-in MOS-FET	Diode Rectification	PWM/PFM (A) PWM (B)	100	2400	100	Yes	-40	125	T1	HSOP8-M1	Light Load Mode(A ver.) External Clock Synchronization Over Current Protection (Hiccup type) Thermal Soft-Start UVLO PG Phase : External
NJW4154	4.5	40	45	3000	0.8	35.2	Built-in MOS-FET	Diode Rectification	PWM	300 (External Clock Synchronization)		88	Yes	-40	125	T1	HSOP8-M1	Over Current Protection (Hiccup type) Thermal Soft-Start UVLO PG Phase :Internal
R1270 AEC ♡	3.6	34	36	3000	0.8 (Adj)	31.6 (Adj)	Built-in MOS-FET	Diode Rectification	Forced PWM, PWM/VFM	300	2400	–	Yes	-40	125	K/A	HSOP-18	Over Current Protection : Fold back-type, with Latch-type FLAG Output Function Soft-Start : External UVLO OVLO Thermal Phase : External
U.D. R1277 AEC	4.0	34	36	8000	0.7 (Adj)	5.3 (Adj)	Built-in MOS-FET	Synchronous Rectification	Forced PWM, PWM/VFM	250	1000	–	Yes	-40	125	K/A	QFN0505-31	Over Current Protection : Latch-type or Hiccup-type Tracking function Soft-Start : External UVLO OVP Thermal SSCG : Ver. 03x/13x PG Phase : External
R1273 AEC	4.0	34	36	14000	0.7 (Adj)	5.3 (Adj)	Built-in MOS-FET	Synchronous Rectification	Forced PWM, PWM/VFM	250	1000	–	Yes	-40	125	A	QFN0505-32B	Over Current Protection : Latch-type or Hiccup-type Tracking function Soft-Start : External UVLO OVP Thermal SSCG : Ver. 03x/ 13x PG Phase : External

Part No.	Input Voltage Range [V]		Absolute Max. Ratings [V]	Output Current [mA]	Output Voltage Range [V]		SW. Device	Rectification	SW. Control	Oscillation Frequency [kHz]		Maximum Duty [%]	External Clock Synchronization	Operating Temp. Range [℃]		Automotive Quality Class	Package	key Features
	min.	max.			min.	max.				min.	max.			min.	max.			
R1272 AEC ♡	4.0	34	36	–	0.7 (Adj)	5.3 (Adj)	Controller	Synchronous Rectification	Forced PWM, PWM/VFM	250	1000	–	Yes	-40	125	K/A	HSOP-18	Over Current Protection : Latch-type or Hiccup-type Tracking function Soft-Start : External UVLO OVP Thermal SSCG : Ver. 03x/ 13x PG Phase : External
R1271 AEC ♡ 2030	3.6	30	42	1000	3.3,5.0 (Fix)		Built-in MOS-FET	Synchronous Rectification	Forced PWM	2000 (Fix)		–	–	-40	125	K/A	DFN3030-12B HSOP-18	Over Current Protection : Latch-type or Hiccup-type PLP♡: HSOP-18 Soft-Start : External UVLO OVLO Thermal SSCG : Ver. xx1C/D PG
R1245 AEC ♡	4.5	30	32	1200	0.8 (Adj)	27.3 (Adj)	Built-in MOS-FET	Diode Rectification	PWM	A/B:330(Fix) C/D:500 (Fix) E/F:1000 (Fix) G/H:2400 (Fix)		–	–	-40	105	J/A	HSOP-8E DFN2020-8	Over Current Protection : Latch-type or Hiccup-type Soft-Start UVLO Thermal
R1275 AEC ♡ 2027	3.6	30	36	2000	3.3 (Adj)	5.0 (Adj)	Built-in MOS-FET	Synchronous Rectification	Forced PWM	1800	2200	–	Yes	-40	125	A	HSOP-18	Over Current Protection : Hiccup- type Soft-Start : External Adjustable UVLO OVLO Thermal SSCG : Ver. 003C PG Phase : External
R1278 AEC ♡ 2030	3.6	30	36	2000	3.3 (Adj)	5.0 (Adj)	Built-in MOS-FET	Synchronous Rectification	Forced PWM	1800	2200	–	Yes	-40	125	K/A	HSOP-18	Over Current Protection : Hiccup-type Tracking function Soft-Start : External Adjustable UVLO OVLO Thermal SSCG : Ver. 003C PG Phase : External
R1276 AEC ♡ 2030	3.6	30	36	3000	0.7 (Adj)	6.5 (Adj)	Built-in MOS-FET	Synchronous Rectification	Forced PWM, PWM/VFM	250	1000	–	Yes	-40	125	K/A	HSOP-18	Over Current Protection : Hiccup-type Tracking function Soft-Start : External Adjustable UVLO OVLO Thermal SSCG : Ver. 00xC PG Phase : External
RP550 AEC ♡	2.3	4.5 or 5.5	6.5	1000 × 2ch.	0.6 (Adj)	3.3 (Adj)	Built-in MOS-FET	Synchronous Rectification	Forced PWM, PWM/VFM	2300 (Fix)		100	–	-40	105	A	DFN3030-12	2ch. Over Current Protection : Latch-type Soft-Start UVLO Thermal
RP506 AEC ♡	2.5	4.5 or 5.5	6.5	2000	0.8 (Fix) 0.6/0.8 (Adj)	3.3 (Fix) 4.0 (Adj)	Built-in MOS-FET	Synchronous Rectification	Forced PWM, PWM/VFM	1200 (Fix) 2300 (Fix)		100	–	-40	A:105 K:125	K/A	DFN3030-12	Over Current Protection : Latch-type Soft-Start : External Adjustable UVLO Thermal PG Discharge : Ver. H/L
NJW4110 ♡	2.7	5.5	7.0	3000	0.6	5.0	Built-in MOS-FET	Synchronous Rectification	PWM	100	2400	100	Yes	-40	125	T1	EQFN24-LE	Light Load Mode Over Current Protection (Hiccup type) Thermal Soft-Start : External Adjustable UVLO PG
RP510 AEC ♡	2.5	5.5	6.5	4000	0.8 (Fix/ Adj)	3.3 (Fix/ Adj)	Built-in MOS-FET	Synchronous Rectification	Forced PWM	2300 (Fix)		100	–	-40	A:105 K:125	K/A	DFN3030-12	Over Current Protection : Latch-type or Fold back-type Soft-Start : External Adjustable UVLO Thermal PG Discharge : Ver. H/N

Power Supply

DC/DC(Boost Converter/SW.REG.)

Part No.	Input Voltage Range [V]		Absolute Max. Ratings [V]	Output Current [A]	Output Voltage Range [V]		SW. Device	SW. Control	Oscillation Frequency [kHz]		Maximum Duty [%]	External Clock Synchronization	Operating Temp. Range [℃]		Automotive Quality Class	Package	key Features
	min.	max.			min.	max.			min.	max.			min.	max.			
NJW4132 ♡	4.55	40	45	1.75	4.55	38	Built-in MOS-FET	PWM	2000 (Fix)		80	Yes	-40	125	T1	SOT-89-5-2	PWM, External Clock Synchronization Over Current Protection (Hiccup type) Thermal Soft-Start UVLO Phase
NJW4133 AEC	3.0	40	45	5.0	3.0	38	Built-in MOS-FET	PWM	100	2400	92	Yes	-40	125	T1	HSOP8-M1	Over Current Protection (Hiccup type) Thermal Soft-Start OVP UVLO
NJW4140 AEC ♡	3.0	40	45	–	3.0	–	Controller	PWM	40	1000	85	–	-40	125	Z2, T1	MSOP8 (VSP8)	Available for Fly-Back AEC=Z2 Pulse-by-pulse current limit circuit Soft-Start UVLO Diode
NJW1871 AEC ♡	2.5	40	45	–	2.5	–	Controller	PWM	50	1000	87	Yes	-40	125	T1	MSOP10 (VSP10)	5.2V Gate Drive Available for Fly-Back RUN function Over Current Protection (Hiccup type) Thermal Soft-Start UVLO OVP
NJW4142 AEC ♡	2.5	40	45	–	2.5	–	Controller	PWM	50	1000	87	Yes	-40	125	T1	MSOP10 (VSP10)	10V Gate Drive Available for Fly-Back RUN function Over Current Protection (Hiccup type) Thermal Soft-Start UVLO OVP
U.D. NJW1871A AEC	4.5 (TBD)	40	45	–	4.5 (TBD)	–	Controller	PWM	1000	2000 (TBD)	(TBD)	Yes	-40	125	T1	MSOP10 (VSP10)	5.2V Gate Drive Available for Fly-Back RUN function Over Current Protection (Hiccup type) Thermal Soft-Start UVLO OVP
R1211 ♡	2.5	6.0	6.5	–	Adjustable		Controller	PWM	B:700 D:300		90	–	-40	85	A	SOT-23-6W	for LCD/CCD/OLED Over Current Protection : Latch-type Phase : Internal with stand-by. Soft-Start UVLO
R1290 ♡	2	5.5	6.5	2	Up to 20 Adjustable		Built-in MOS-FET	PWM	180	1400	91	Yes	-40	105	A	QFN0404-24	for LCD/CCD/OLED +CP : 1/4th operating frequency Sequencing Soft-Start: External UVLO
R1294 AEC ♡	2	5.5	6.5	2	Up to 20 Adjustable		Built-in MOS-FET	PWM	210	1400	91	Yes	-40	105	J/A	QFN0404-24B	for LCD/CCD/OLED +CP : 1/4th operating frequency Sequencing Soft-Start: External UVLO

Clock IC with SSFM for Switching Regulator

Part No.	Operating Voltage Range [V]		Absolute Max. Ratings [V]	Clock Frequency [kHz]		Frequency Spreading [%]		Operating Temp. Range [℃]		Automotive Quality Class	Package
	min.	max.		min.	max.	typ.	max.	min.	max.		
U.D. NJW4203 AEC	2.7	5.5	7.0	120	2400	± 2.7	± 4.4	-40	125	T1	MSOP8(VSP8)

Switching Drivers (Gate Drivers)

Part No.	Supply Voltage [V]		Absolute Max. Ratings [V]	Output Current (Source) [A]	Output Current (Sink) [A]	Output Rise Time [nsec]	Output Fall Time [nsec]	Operating Temp. Range [℃]		Automotive Quality Class	Features	Function	Package
	min.	max.		typ.	typ.	typ.	typ.	min.	max.				
NJW4841 ♡	4.0	20	40	2.0	2.0	25	20	-40	125	T1	Built-in Thermal Shut Down Under Voltage Lockout	Low side Nch. Gate Drive	MSOP8(VSP8)
NJW4868	4.0	5.5	7.0	1.3	1.3	10	10	-40	125	T1	Built-in Current and Voltage detection circuit Built-in Voltage detection resistors	Low side Nch. Gate Drive	MSOP8(VSP8)

Part No.	Supply Voltage [V]		Absolute Max. Ratings [V]	Output Current (Source) [A]	Output Current (Sink) [A]	Output Rise Time [nsec]	Output Fall Time [nsec]	Operating Temp. Range [℃]		Automotive Quality Class	Features	Function	Package
	min.	max.		typ.	typ.	typ.	typ.	min.	max.				
U.D. ND1433 AEC	4.0	45	50	0.002	–	–	–	-40	125	P	Built-in Charge Pump Power Supply anomaly detection (UVLO/OVP/Reverse Battery protection/ Ground Loss protection) Back to Back configuration	High side Nch. Gate Drive	SSOP-16-BD

Switching Driver (High Side Switch/Low Side Switch)

Part No.	Absolute Max. Ratings [V]		Drain-Source Voltage [V]	Supply Voltage Range [V]		Input Voltage Range [V]		Quiescent Current [μA]	Input Current [μA]	Drain Current [A]	On-Resistance [Ω]	Operating Temp. Range [℃]		Automotive Quality Class	Function	Package
	Drain-Source Voltage	Input Voltage	max.	min.	max.	min.	max.					min.	max.			
NJW4830 ♡	45	6.0	40	4.6	40	2.64	5.5	110	150	0.5	0.35	-40	125	T1	High Side Switch (P ch.)	SOT-89-5-2

PMIC

Part No.	Number of Outputs	Configuration	Operating Voltage Range [V]		Absolute Max. Ratings [V]	Output Current [A]	Output Voltage Range [V]		Reference Voltage/Output Voltage Accuracy [%]		Oscillation Frequency [kHz]		External Clock Synchronization	Operating Temp. Range [℃]		Automotive Quality Class	Package	key Features
			min.	max.			min.	max.	Room Temp.	Full Temp.	min.	max.		min.	max.			
NJW4750 AEC ♡	4	HV Buck	3.9	40	45	1.2	2.5	5.5	± 1.0	± 2.0	280	2400	Yes	-40	125	T1	EQFN26-HH	Ch3 Selectable Reg
		LV Buck	2.4	5.5	7.0	0.6	1.1	3.6										
		LV Buck	2.4	5.5	7.0	0.6	1.1	3.6										
		LV LDO	2.4	5.5	7.0	0.3	1.1	3.6					–					
U.D. NP8700 AEC	4	HV Buck	3.9	20	22	1.2	2.5	5.0	± 1.0	± 2.0	2000 (Fix)		Yes	-40	125	P	QFN3426-26-NC	SSFM
		LV Buck	2.4	5.5	7.0	1.0	0.8	3.3										
		LV Buck	2.4	5.5	7.0	1.0	0.8	3.3										
		LV LDO	2.4	5.5	7.0	0.3	0.8	3.3					–					
U.D. NJW4760 AEC	12	HV LDO	4.5	40	45	0.05	3.3(Fix)		± 1.5	TBD	400	2000	–	-40	125	T1	EQFN48-SN	OTP I²C Sequence Interface SSFM Digital Watchdog Timer
		HV LDO	4.5	40	45	0.05	1.8(Fix)											
		LV Buck	2.4	5.5	7.0	3.0	0.6	3.6					Yes					
		LV Buck	2.4	5.5	7.0	3.0	0.6	3.6										
		LV Buck	2.4	5.5	7.0	3.0	0.6	3.6										
		LV Buck	2.4	5.5	7.0	3.0	0.6	3.6										
		LV Buck	2.4	5.5	7.0	2.0	0.6	3.6										
		LV LDO	2.4	5.5	7.0	0.1	1.0	3.3					–					
		LV LDO	2.4	5.5	7.0	0.1	1.0	3.3										
		LV LDO	2.4	5.5	7.0	0.1	1.0	3.3										
		LV LDO	2.4	5.5	7.0	0.5	1.0	3.3										
		LV LDO	2.4	5.5	7.0	0.5	1.0	3.3										

Power Supply

PMIC

Part No.	Number of Outputs	Configuration	Operating Voltage Range [V] min.	Operating Voltage Range [V] max.	Absolute Max. Ratings [V]	Output Current [A]	Output Voltage Range [V] min.	Output Voltage Range [V] max.	Reference Voltage/Output Voltage Accuracy [%] Room Temp.	Reference Voltage/Output Voltage Accuracy [%] Full Temp.	Oscillation Frequency [kHz] min.	Oscillation Frequency [kHz] max.	External Clock Synchronization	Operating Temp. Range [℃] min.	Operating Temp. Range [℃] max.	Automotive Quality Class	Package	key Features
RN5T569 AEC	11	LV Buck	2.7	5.5	6.0	3.0	0.6	3.5	-	± 2.0	2000 (Fix)		–	-40	105	A	QFN0707-48-P27	OTP I²C Sequence Interface Dynamic Voltage Scaling Watchdog Timer
		LV Buck	2.7	5.5	6.0	3.0	0.6	3.5	-	± 2.0								
		LV Buck	2.7	5.5	6.0	2.0	0.6	3.5	-	± 2.0								
		LV Buck	2.7	5.5	6.0	2.0	0.6	3.5	-	± 2.0								
		LV LDO	2.7	5.5	6.0	0.3	0.9	3.5	-	± 2.0	–		–					
		LV LDO	2.7	5.5	6.0	0.3	0.9	3.5	-	± 2.0								
		LV LDO	2.7	5.5	6.0	0.3	0.6	3.5	-	± 2.0								
		LV LDO	2.7	5.5	6.0	0.2	0.9	3.5	-	± 2.0								
		LV LDO	2.7	5.5	6.0	0.2	0.9	3.5	-	± 2.0								
		LV LDO	2.7	5.5	6.0	0.03	1.2	3.5	-	± 2.0								
		LV LDO	2.7	5.5	6.0	0.01	0.9	3.5	-	± 2.0								
U.D. RN5T5611 AEC	3	LV Buck	3.0	5.5	6.5	1.0	1.0	3.3	-	± 1.0	2300 (Fix)		–	-40	125	K	QFN0505-32-P7 (Wettable Flank)	I²C Sequence Interface 4ch. Window Voltage Ditector Analog Built-In Self Test Logic Built-In Self Test
		LV Buck	3.0	5.5	6.5	1.0	1.0	3.3	-	± 1.0								
		LV LDO	3.0	5.5	6.5	0.2	2.5	3.3	-	± 1.0	–		–					

Voltage Detectors (VD), Watchdog Timers (WDT)

Part No.	Operating Voltage Range [V] min.	Operating Voltage Range [V] max.	Absolute Max. Ratings [V]	Detector Threshold Range [V] min.	Detector Threshold Range [V] max.	Detector Threshold Accuracy [%] Full Temp.	Release Delay Time	LDO	WDT	Supply Current [μA] typ.	Operating Temp. Range [℃] min.	Operating Temp. Range [℃] max.	Automotive Quality Class	Package	key Features
R3160 AEC ♡	2.7	60	80	10	48	± 1.75 *1 ± 1.5 *2	Adjustable	–	–	1.8	-40	125	K/A	SOT-23-6	*1 Detector Threshold 20V or lower *2 Detector Threshold 20.5V or higher
R5117 AEC ♡	3.5	42	50	BVD:3.5 SVD:2.5	BVD:12 SVD:5.0	BVD:-2 to 1 SVD:-1.25 to 0.75	Adjustable	Yes Io= 500mA	–	35	-40	125	K/A	HSOP-8E HQFN0808-28	PLP♡: HSOP-8E Voltage Regulator with Battery Voltage Detector Peak : 60V Thermal
R3152 AEC ♡	3.0	42	50	OV:1.1 UV:1.0	OV:5.9 UV:4.8	-1.25 to 0.75	Adjustable	–	–	1.5	-40	125	K/A	SOT-23-6	Window Voltage Detector SENSE Pin Detection B : without Hysteresis Type
R3500 AEC ♡	3.0	42	50	OV: 1.0 UV: 0.9	OV: 5.9 UV: 5.0	-1.25 to 0.75	Adjustable	–	–	10	-40	125	K/A	HSOP-18	Applicable to failure diagnosis 4CH Window Voltage Detector SENSE Pin Detection
R5116 AEC ♡	3.5	42	50	OV:3.3 UV:2.5	OV:5.5 UV:5.0	-1.25 to 0.75	Adjustable	Yes Io= 500mA	–	25	-40	125	K/A	HSOP-8E HQFN0808-28	PLP♡: HSOP-8E Voltage Regulator with Window Voltage Detector Peak : 60V Thermal
R5112 AEC ♡	3.5	42	50	B:1.6 D:2.9	B:4.8 D:4.8	± 1.6	Adjustable	Yes Io= 200mA	–	3.8	-40	125	K/A	HSOP-8E	Voltage Regulator with VD Peak : 60V Thermal
R5114 AEC ♡	3.5	42	50	2.5	4.8	± 1.6	Adjustable	Yes Io= 250mA	Yes	8.5	-40	125	K/A	HSOP-8E HSOP-18 HQFN0808-28	PLP♡: HSOP-8E, HSOP-18 Timeout WDT Peak : 60V Thermal
R5115 AEC ♡	3.5	42	50	2.5	4.8	± 1.6	Adjustable	Yes Io= 250mA	Yes	8.5	-40	125	K/A	HSOP-8E HSOP-18 HQFN0808-28	PLP♡: HSOP-8E, HSOP-18 Window WDT Peak : 60V Thermal
R3154 AEC ♡	3.0	42	50	OV:0.75 UV:0.55	OV:3.7 UV:3.3	-1.25 to 0.75	Adjustable	–	–	2	-40	125	R/A	SOT-23-6	Applicable to failure diagnosis Window Voltage Detector SENSE Pin Detection Type
U.D. NP4271 AEC	4.0	40	45	4.6 4.1	5.6	Low: ± 2.0 High: ± 5.0	Adjustable	Yes Io= 500mA	Yes	120	-40	125	P	HSOP-8-AC	Window Voltage Detector
U.D. NV3601 AEC	2.4 (VDD) 0 (SENSE)	6 (VDD) 36 (SENSE)	7 (VDD) 42 (SENSE)	OV:4.5 UV:3.3	OV:22.2 UV:19.8	-1.25 to 0.75	–	–	–	TBD	-40	125	P/Q	SOT-23-5-DC	Window Voltage Detector

Part No.	Operating Voltage Range [V] min.	Operating Voltage Range [V] max.	Absolute Max. Ratings [V]	Detector Threshold Range [V] min.	Detector Threshold Range [V] max.	Detector Threshold Accuracy [%] Full Temp.	Release Delay Time	LDO	WDT	Supply Current [μA] typ.	Operating Temp. Range [℃] min.	Operating Temp. Range [℃] max.	Automotive Quality Class	Package	key Features
U.D. NV3600 AEC	2.4(VDD) 0(SENSE)	6(VDD) 36(SENSE)	7(VDD) 42(SENSE)	3.3	19.8	-1.25 to 0.75		–	–	TBD	-40	125	P/Q	SOT-23-5-DC	-VDET & +VDET Individually set voltage, +VDET setting range: 4.5V to +22.2V
R3119xxxxA AEC ♡	1.2	36	50	2.3	12	-3 to 2	Adjustable	–	–	3.3	-40	105	J	SOT-23-5	
R3120xxxxA AEC ♡	1.2	36	50	2.3	12	-3 to 2	Adjustable	–	–	3.3	-40	105	A	SOT-23-5	
R3121xxxxA/G AEC ♡	1.4	36	50	3	12	-2.2 to 2.5	Adjustable	–	–	3.8	-40	125	K/A	SOT-23-6	VDD Pin Detection Type G : without Hysteresis Type
R8300xxxxA/G AEC ♡	1.4	36	50	3	12	-2.2 to 2.5	Adjustable	–	–	3.8	-40	125	R8	SOT-23-6	VDD Pin Detection Type G : without Hysteresis Type
R3150xxxxA/B AEC ♡	1.4	36	50	5	10	± 2	Adjustable	–	–	3.8	-40	105	J	SOT-23-6	Detect and Release Delay Function VDD Pin Detection Type
R3151xxxxA/B AEC ♡	1.4	36	50	5	10	± 2	Adjustable	–	–	3.8	-40	105	A	SOT-23-6	Detect and Release Delay Function VDD Pin Detection Type
R8315xxxxA/B AEC ♡	1.4	36	50	5	10	± 2	Adjustable	–	–	3.8	-40	125	R8	SOT-23-6	Detect and Release Delay Function VDD Pin Detection Type
R5110 AEC ♡	3.5	36	50	1.6	5.5	± 1.8	Adjustable	Yes Io= 500mA	Yes	25	-40	125	K/A	HSOP-8E HSOP-18 HQFN0808-28	Timeout or Window WDT Peak : 60V Thermal Inrush
R5111 AEC ♡	3.5	36	50	1.6	5.5	± 1.8	Adjustable	Yes Io= 300mA	Yes	25	-40	125	K/A	HSOP-8E HSOP-18 HQFN0808-28	Timeout or Window WDT Peak : 60V Thermal Inrush
R8360 AEC ♡	3.5	36	50	1.8	5	± 1.8	Adjustable	Yes Io= 500mA	Yes	25	-40	125	R8	HSOP-8E HSOP-18	Timeout or Window WDT Peak : 60V Thermal Inrush
R5104 ♡ 2029		36	50	2.8	4	± 2.0 (Ta=25℃)	Adjustable	Yes Io=Ext.	Yes	60	-40	125	K	SSOP-10	Timeout WDT
R3119xxxxE AEC ♡	2.1	6	7	2.3	12	-3 to 2	–	–	–	3.3	-40	105	J	SOT-23-5	SENSE Pin Detection Type
R3120xxxxE AEC ♡	2.1	6	7	2.3	12	-3 to 2	–	–	–	3.3	-40	105	A	SOT-23-5	SENSE Pin Detection Type
R3121xxxxE AEC ♡	2.4	6	7	3	12	-2.2 to 2.5	Adjustable	–	–	3.5	-40	125	K/A	SOT-23-6	SENSE Pin Detection Type
R8300xxxxE AEC ♡	2.4	6	7	3	12	-2.2 to 2.5	Adjustable	–	–	3.5	-40	125	R8	SOT-23-6	SENSE Pin Detection Type
R3150xxxxE/F AEC ♡	3.6	6	7	5	10	± 2	Adjustable	–	–	3.5	-40	105	J	SOT-23-6	Detect and Release Delay Function SENSE Pin Detection Type
R3151xxxxE/F AEC ♡	3.6	6	7	5	10	± 2	Adjustable	–	–	3.5	-40	105	A	SOT-23-6	Detect and Release Delay Function SENSE Pin Detection Type
R8315xxxxE/F AEC ♡	3.6	6	7	5	10	± 2	Adjustable	–	–	3.5	-40	125	R8	SOT-23-6	Detect and Release Delay Function SENSE Pin Detection Type
R5105 AEC ♡	0.9	6	7	1.5	5.5	-2.8 to 1.5	Adjustable	–	Yes	11	-40	J: 105 A: 125	J/A	SOT-23-6	Timeout WDT
R5106 AEC ♡	0.9	6	7	1.5	5.5	-2.8 to 1.5	Adjustable	–	Yes	11	-40	J: 105 A: 125	J/A	SOT-23-6	Timeout WDT CD pin and CTW pin are combined.
R5107 AEC ♡	0.9	6	7	1.5	5.5	-2.8 to 1.5	Adjustable	–	Yes	11	-40	J: 105 A: 125	J/A	SSOP-8G	Timeout WDT MR Pin (Manual Reset)
R5108 AEC ♡	1.5	6	7	1.5	5.5	-2.8 to 1.5	Adjustable	–	Yes	11	-40	J: 105 A: 125	J/A	SSOP-8G	Timeout WDT SENSE Pin Detection Type
R5109 AEC ♡	0.9	6	7	1.5	5.5	-2.8 to 1.5	Adjustable	–	Yes	11.5	-40	J: 105 A: 125	J/A	SSOP-8G	Timeout WDT 2 clock input type
R8355 AEC ♡	0.9	6	7	1.5	5.5	-2.8 to 1.5	Adjustable	–	Yes	11	-40	125	R8	SOT-23-6	Timeout WDT
R8356 AEC ♡	0.9	6	7	1.5	5.5	-2.8 to 1.5	Adjustable	–	Yes	11	-40	125	R8	SOT-23-6	Timeout WDT CD Pin and CTW Pin are combined.

Power Supply

Voltage Detectors (VD), Watchdog Timers (WDT)

Part No.	Operating Voltage Range [V]		Absolute Max. Ratings [V]	Detector Threshold Range [V]		Detector Threshold Accuracy [%]	Release Delay Time	LDO	WDT	Supply Current [μA]	Operating Temp. Range [℃]		Automotive Quality Class	Package	key Features
	min.	max.		min.	max.	Full Temp.				typ.	min.	max.			
R8357 AEC ♡	0.9	6	7	1.5	5.5	-2.8 to 1.5	Adjustable	–	Yes	11	-40	125	R8	SSOP-8G	Timeout WDT MR Pin (Manual Reset)
R8358 AEC ♡	1.5	6	7	1.5	5.5	-2.8 to 1.5	Adjustable	–	Yes	11	-40	125	R8	SSOP-8G	Timeout WDT SENSE Pin Detection Type
R8359 AEC ♡	0.9	6	7	1.5	5.5	-2.8 to 1.5	Adjustable	–	Yes	11.5	-40	125	R8	SSOP-8G	Timeout WDT 2 clock input type
R3117 AEC ♡	1.0	6	7	0.7	5	± 2.0	Adjustable	–	–	0.29	-40	105	A	SOT-23-5	Normal type SENSE Pin Detection Type
R3116 AEC ♡	0.5	6	7	0.7	5	± 1.5	Adjustable	–	–	0.35	-40	105	A	DFN1212-4 SOT-23-5	
R3118 AEC ♡	1	6	7	0.6	5	± 2.5	Adjustable	–	–	0.4	-40	A: 85 K: 125	K/A	SOT-23-6	SENSE Pin Detection Type
R3134 AEC ♡	0.75	6	6.5	1	5	± 1.8 (Ta= 25℃)	Fix	–	–	0.8	-40	85	A	SOT-23-6	without Hysteresis Type

LDD (Laser Diode Driver)

Part No.	Supply Voltage [V]	CH	Maximum Output Rate Per 1 Channel [Mdots/sec]	Raising/ Falling Time [ns]	Maximum Operating Current [mA]		Operating Temp. Range [℃]		Automotive Quality Class	Protection Function	Package	key Features
					LD1	LD2/3/4	min.	max.				
RN5C750 AEC	1.8 & 3.3	4CH	200	1.0	800	400	-40	105	J	LD Over Current Detection LD Pin Short Circuit Detection PDI Current Error Detection Thermal Shutdown	QFN0808-56	Wettable Flank

Constant-Current LED Driver Controller IC

Part No.	Input Voltage rang [V]		Absolute Max. Ratings [V]	Max. SOURCE Pin Voltage Accuracy (mV)	Signal Input Circuit	Dimming Control	Supply Current [μA]	Operating Temp. Range [℃]		Automotive Quality Class	Package	Key Features
	min.	max.					typ.	min.	max.			
R1580 AEC ♡	3.6	34.0	36	001A: 400 ± 8 002A: 800 ± 16 003A: 400 ± 8	001A: Comparator Input, H=1.3 V, L=1.1 V 002A: Comparator Input, H=1.3 V, L=1.1 V 003A: Inverter Input, H=1.2 V, L=0.4 V	001A: 1% to 100% 002A: 0.5% to 100% 003A: 1% to 100%	320	-40	105	A	SOT-23-6	Thermal UVLO OVP

USB High-side Switch ICs

Part No.	Input Voltage rang [V]		Absolute Max. Ratings [V]	Current Limit Threshold (A)		Short Current Limit (A)		ON Resistance (m Ω)	Supply Current [μA]	Operating Temp. Range [℃]		Automotive Quality Class	Key Features	Package
	min.	max.		typ.	max.	typ.	max.		typ.	min.	max.			
R5523 ♡	2.2	5.5	6.5	1	1.8	0.75	1.5	130	20	-40	85	H	P-ch MOS High side Switch IC EN: H/L Soft-Start Thermal UVLO	SOT-23-5
R5524 ♡	2.7	5.5	6	001/002: 0.8 004: 1.55	001/002: 0.98 004: 1.85	0.65	0.8	100	110	-40	85	A	N-ch MOS High side Switch IC / Load SW IC EN: H Soft-Start Thermal UVLO Discharge Reverse : OFF	SOT-23-5

ASSP

Part No.	key Features	Supply Voltage [V]		Automotive Quality Class	Package	key Features
		min.	max.			
NJU77903 AEC	High Output Current, Rail-to-Rail Input, Output Single CMOS Operational Amplifiers	6.8	36	H	TO-252-5-L3	High output current : ± 100mA typ. (200mApp typ.) Thermal shutdown Current limit
NJU7870 AEC	Transconductance amplifier for resolver excitation	2.4	5.5	Z2	SSOP16-B3	Transconductance : 13.5mAp/Vpp・typ. Thermal shutdown function
NJU7890 AEC	1000V High Voltage Monitor IC	2.2	5.5	Z	PMAP11-PM	Common Mode Input Voltage Rangee : 1000V High Precision Attenuation Rate : ± 1% High Input Resistance : 30M Ω min.

Motor IC

Part No.	Function	Operating Voltage Rangee [V]		Maximum Rating		Operating Temp. Range [℃]		Automotive Quality Class	Additional Function	Package
		min.	max.	Supply Voltage [V]	Output Current [mA]	min.	max.			
NJU7367B AEC	Single-phase DC Brushless Motor Driver	2.0	5.5	7	1000	-40	125	T1	TSD, OCP, Lock Protection	MSOP8(TVSP8)

Audio & Video ICs

Audio Amplifiers (Power Amplifiers)

Part No.	Channel	Operating Voltage Range [V]		Output Power			Stand-by	Mute	Operating Temp. Range [℃]		Automotive Quality Class	Package
		min.	max.	Po	V+ [V]	RL [ohm]			min.	max.		
NJU7089	BTL:1ch.	1.8	5.5	1.2W typ.	5	8	Yes	Yes	-40	105	T	SSOP20-C3, MSOP8(VSP8), HTSSOP24-P1
NJU7089 AEC ♡	BTL:1ch.	1.8	5.5	1.2W typ.	5	8	Yes	Yes	-40	105	T	DFN8-V1(ESON8-V1)
NJU72060	BTL:1ch	2.7	5.5	500mW typ.	5	8	Yes	Yes	-40	105	T	MSOP8(VSP8), HSOP8-M1, DFN8-V1(ESON8-V1)

Audio Amplifiers (Class D Amplifiers)

Part No.	Channel	Operating Voltage Range [V]		Output Power			Stand-by	Mute	Operating Temp. Range [℃]		Automotive Quality Class	Package
		min.	max.	Po	V+ [V]	RL [ohm]			min.	max.		
NJU8759A	BTL:1ch.	1.8	5.5	3.0W typ.	5	4	Yes	Yes	-40	105	T	HSOP8-M1
U.D. NA1150	BTL:1 c h .	2.6	5.5	1.2W typ.	5	8	Yes	Yes	-40	125	P	MSOP8(VSP8), DFN8-V1(ESON8-V1)

Audio Amplifiers (Line Amplifiers)

Part No.	Channel	Operating Voltage Range [V]		Output Voltage			Output Coupling Capacitor-less	Pop Noise Suppression Circuit	Mute	Operating Temp. Range [℃]		Automotive Quality Class	Package
		min.	max.	Vom	V+ [V]	RL [ohm]				min.	max.		
NJU72015	2ch.	3	3.6	2.3Vrms typ.	3.3	10k	Yes	Yes	Yes	-40	85	-	SSOP14
NJU72040	2ch.	2.7	3.6	2.7Vrms typ.	3.3	32k	–	Yes	Yes	-40	85	-	SSOP14
NJW1240	6ch.	6	10	5Vrms min.	8	47k	Yes	Yes	Yes	-40	85	-	SSOP32

Audio Amplifiers (Microphone Amplifiers)

Part No.	Operating Voltage Range [V]		Channel	Voltage Gain (※) [dB]	Sensitivity Adjust	2wire/3wire	Operating Temp. Range [℃]		Automotive Quality Class	Key Features	Package
	min.	max.					min.	max.			
NJU7907A	4.5	16	1ch.	+24 to +40	–	2wire	-40	85	–	Standard	MSOP10(TVSP10)
NJU72090	1.8	16	1ch.	+24 to +40	Yes	2wire	-40	105	–	FET for impedance converter, Fine Tune Sensitivity	MSOP10(TVSP10)
NJU72097	2.7	16	1ch.	+24 to +40	Yes	2wire	-40	105	–	Fine Tune Sensitivity Regulator for Mic. Capsule	MSOP10(TVSP10)

※ Set by external resistors.

Video Amplifiers

Part No.	Function	Operating Voltage Range [V]		Channel	Clamp	Bias	75ohm Driver	LPF	Operating Temp. Range [℃]		Automotive Quality Class	Package
		min.	max.						min.	max.		
NEW NJM41001	Low Voltage Wide Band	3.0	7.0	1ch.	Yes	–	Yes	–	-40	105	T	SOT-23-6-1
NJM41005 AEC	Isolation Amplifier with Video Driver	4.5	5.5	1ch.	Yes	Yes	Yes	–	-40	105	T	SOT-23-5
NJU71091	1ch. Video Driver with Short to Battery Protection	2.65	3.45	6dBx1	–	Yes	Yes	6th order	-40	125	T1	DFN8-U1 (ESON8-U1)
NJU71094	Differential Output Video Driver with Short to Battery Protection	2.65	3.45	6dBx2	–	Yes	Yes	6th order	-40	125	T1	DFN8-W2 (ESON8-W2)

RF Devices

RF Switches

Part No.	Function	P-0.2dB [dBm]	Insertion Loss [dB]	Isolation [dB]	Frequency Range [GHz]	Automotive Quality Class	Package Size [mm]
NJG1817ME4	SPDT	40@6.0GHz	0.35@3.85GHz 0.40@4.7GHz 0.45@6.0GHz	27@3.85GHz 27@4.7GHz 25@6.0GHz	0.3 to 6	–	2.0x2.0x0.397
NJG1669MD7	SPDT	37@0.9GHz 37@5.9GHz	0.3 @0.9GHz 0.45@5.9GHz	32@0.9GHz 25@5.9GHz	0.05 to 6	–	1.6x1.6x0.397
NJG1681MD7	SPDT	>36@0.9GHz >36@2.7GHz >36@5.9GHz	0.18@0.9GHz 0.23@2.7GHz 0.45@5.9GHz	45@0.9GHz 30@2.7GHz 20@5.9GHz	0.2 to 6	–	1.6x1.6x0.397
NJG1802K51	SPDT	>36@0.9GHz >36@2.7GHz >36@5.9GHz	0.18@0.9GHz 0.23@2.7GHz 0.45@5.9GHz	50@0.9GHz 30@2.7GHz 20@5.9GHz	0.2 to 6	–	2.0x2.0x0.375
NJG1814MD7	SPDT	>33@0.9GHz >36@2.7GHz >33@5.9GHz	0.35@0.9GHz 0.40@2.7GHz 0.45@5.9GHz	42@0.9GHz 34@2.7GHz 33@5.9GHz	0.2 to 6	–	1.6x1.6x0.397
NJG1801K75	SPDT	30@2.5GHz 30@5.9GHz	0.35@2.4 to 2.5GHz 0.45@4.9 to 5.9GHz	28@2.4 to 2.5GHz 30@4.9 to 5.9GHz	0.05 to 6	–	1.0x1.0x0.375
NJG1801AKGC-A NJG1801BKGC-A AEC	SPDT	30@2.5GHz 30@5.9GHz	0.35@2.4 to 2.5GHz 0.45@4.9 to 5.9GHz 0.6@8.5GHz	28@2.4 to 2.5GHz 27@4.9 to 5.9GHz 18@8.5GHz	0.05 to 8.5	A	1.6x1.6x0.78
NJG1806K75	SPDT	30@2.5GHz 30@5.9GHz	0.35@2.4 to 2.5GHz 0.40@4.9 to 5.9GHz	25@2.4 to 2.5GHz 25@4.9 to 5.9GHz	0.05 to 6	–	1.0x1.0x0.375
NJG1815K75	SPDT	30@2.5GHz 30@5.9GHz	0.45@2.4 to 2.5GHz 0.40@4.9 to 6GHz	25@2.4 to 2.5GHz 25@4.9 to 6GHz	1 to 6	–	1.0x1.0x0.375
NJG1815AK75-A AEC	SPDT	30@2.5GHz 30@5.9GHz	0.45@2.4 to 2.5GHz 0.40@4.9 to 6GHz	25@2.4 to 2.5GHz 25@4.9 to 6GHz	1 to 6	A	1.0x1.0x0.375
NJG1682MD7	SP3T	>36@0.9GHz >36@2.7GHz	0.22@0.9GHz 0.30@2.7GHz	35@0.9GHz 27@2.7GHz	0.2 to 3	–	1.6x1.6x0.397
NJG1804K64	SP3T	28@2.5GHz 27@5.9GHz	0.50@2.4 to 2.5GHz 0.60@4.9 to 5.9GHz	30@2.4 to 2.5GHz 26@4.9 to 5.9GHz	0.05 to 6	–	1.5x1.5x0.375
NJG1684ME2	SP4T	>36@0.9GHz >36@2.7GHz	0.25@0.9GHz 0.35@2.7GHz	37@0.9GHz 25@2.7GHz	0.2 to 3	–	1.8x1.8x0.397
NJG1809ME7	SP4T	>33@0.9GHz >33@2.7GHz >33@5.9GHz	0.35@0.9GHz 0.40@2.7GHz 0.50@5.9GHz	36@0.9GHz 27@2.7GHz 23@5.9GHz	0.2 to 6	–	2.0x2.0x0.397
NJG1812AMET-A AEC	DPDT	>36@0.9GHz >36@2.7GHz	0.25@0.9GHz 0.45@2.7GHz	25@0.9GHz 17@2.7GHz	0.2 to 3	A	2.0x2.0x0.78

LNAs (Low Noise Amplifiers)

Part No.	Applications	Frequency Range [MHz]	Operating Voltage [V]	Operating Current [mA]	Gain [dB]	NF [dB]	P-1dB [dBm]	IIP3 [dBm]	Automotive Quality Class	Package Size [mm]
NJG1144KA1	GNSS	1559 to 1606	2.85/1.8	3.5/1.8	21/18	0.65/0.85	-16.5 /-18.5	-2/-6	–	1.6x1.6x0.55
NJG1150UA2	GNSS	1559 to 1606	2.8/1.8	4.9/4.2	16	0.6	-7/-9	1/-1	–	1.0x1.0x0.37
NJG1155UX2	GNSS	1559 to 1606	2.8/1.8	3.5/3.1	19/18.5	0.75	-12.5/-16	-1.5/-5	–	1.1x0.7x0.37
NJG1187KG1	GNSS	1559 to 1610	3.3	8	34	0.6	-20	-17	–	1.6x1.6x0.397
		1164 to 1300	3.3	8	37	0.65	-21	-17		
NJG1169UX2	3G/ LTE	880	2.8/1.8	4.8/4.0	12.5/12	0.8	1/-2	0/-0.5	–	1.1x0.7x0.37
NJG1170UX2	3G/ LTE	2000	2.8/1.8	4.8/4.0	15/13.5	0.7/0.9	-8.5/-12	2/-2	–	1.1x0.7x0.37
		2500	2.8/1.8	4.8/4.0	14.5/13.5	0.8/1.1	-8/-11	3.5/-1.5		
NJG1173UX2	3G/ LTE	3500	2.8/1.8	5.0/3.5	13.5/12	1.0/1.3	-10/-12	5/0	–	1.1x0.7x0.37
NJG1175KG1	LTE/ WLAN	4900 to 5950	3.3	13	16	0.95	-5	9	–	1.6x1.6x0.397
NJG1182UX2	LTE/ WLAN	5500	2.8/1.8	5.0/3.5	15/14.5	1.1/1.4	-11/-13	2/-1	–	1.1x0.7x0.37

Front-End Modules

Part No.	Applications	Frequency Range [MHz]	Operating Voltage [V]	Operating Current [mA]	Gain [dB]	NF [dB]	Low Band Rejection [dBc]	High Band Rejection [dBc]	Automotive Quality Class	Package Size [mm]
NJG1159PHH-A AEC	GPS	1575	2.8/1.8	3.7/3.0	16.0/15.5	1.50/1.55	55	43	A	1.5x1.1x0.5
	GLONASS	1597 to 1606			16.5/16.0	1.65/1.70				
	BeiDou	1559 to 1591			16.0/15.5	1.70/1.75				
NJG1161PCD	GPS	1575	2.8/1.8	3.3/2.6	18.5/17.5	1.60/1.65	85	75	–	2.5x2.5x0.63
	GLONASS	1597 to 1606				1.70/1.75				

SAW Filter

Part No.	Applications	Center Frequency f0 [MHz]	Passband Width [MHz]	Automotive Quality Class	Package Size [mm]
NSNJ9200A	GPS+GLONASS+Beidou	1582.471	46	–	2.0x1.6x0.65
NSNJ9205	L2	1227.6	20	–	2.0x1.6x0.65
NSNJ9208	L6	1278.75	10	–	2.0x1.6x0.65

● DFN

Pin	Sym-bol	Package	Actual Size	Dimensions (mm)				Quantity/ Reel (pcs)
				Body	Mount Area	Thickness *1	Pitch	
4	L	DFN1212-4		1.2 × 1.2	1.2 × 1.2	0.8	0.5	3,000
8	L	DFN2020-8		2.0 × 2.0	2.0 × 2.0	0.8	0.5	3,000
8	L	DFN2020-8B		2.0 × 2.0	2.0 × 2.0	0.8	0.5	3,000
12	L	DFN3030-12		3.0 × 3.0	3.0 × 3.0	0.8	0.5	3,000
12	L	DFN3030-12B		3.0 × 3.0	3.0 × 3.0	0.8	0.5	3,000
8	KU1	DFN8-U1(ESON8-U1)		2.0 × 2.0	2.0 × 2.0	0.4	0.5	3,000
8	KV1	DFN8-V1(ESON8-V1)		2.3 × 2.3	2.3 × 2.3	0.4	0.5	3,000
8	KW1	DFN8-W1(ESON8-W1)		3.0 × 3.0	3.0 × 3.0	0.705	0.5	1,500
8	KW2	DFN8-W2(ESON8-W2)		3.0 × 3.0	3.0 × 3.0	0.705	0.65	1,500
8	KX7	DFN8-X7(ESON8-X7)		3.5 × 4.0	3.5 × 4.0	0.705	0.65	1,500

*1 Maximum Value

● DIP

Pin	Sym-bol	Package	Actual Size	Dimensions (mm)				Quantity/ Reel (pcs)
				Body	Mount Area	Thickness	Pitch	
8	D	DIP8		8.8 × 6.4	-	3.4	2.54	50/Stick

● EQFN

Pin	Sym-bol	Package	Actual Size	Dimensions (mm)				Quantity/ Reel (pcs)
				Body	Mount Area	Thickness *1	Pitch	
24	MLE	EQFN24-LE		4.0 × 4.0	4.0 × 4.0	0.75	0.5	1,000
26	MHH	EQFN26-HH		3.4 × 2.6	3.4 × 2.6	0.75	0.4	1,500

*1 Maximum Value

● HQFN

Pin	Sym-bol	Package	Actual Size	Dimensions (mm)				Quantity/ Reel (pcs)
				Body	Mount Area	Thickness *1	Pitch	
28	L	HQFN0808-28		8.0 × 8.0	8.8 × 8.8	1.0	0.8	2,000

*1 Maximum Value

● HSOP

Pin	Sym-bol	Package	Actual Size	Dimensions (mm)				Quantity/ Reel (pcs)
				Body	Mount Area	Thickness	Pitch	
6	S	HSOP-6J		5.02 × 3.9	5.02 × 6.0	1.5	1.905	1,000
8	S	HSOP-8E		5.2 × 4.4	5.2 × 6.2	1.45	1.27	1,000
18	S	HSOP-18		5.2 × 4.4	5.2 × 6.2	1.45	0.5	1,000
8	GM1	HSOP8-M1		5.2 × 4.4	5.2 × 6.2	1.54	1.27	3,000
8	AC	HSOP-8-AC		5.2 × 4.4	5.2 × 6.2	1.54	1.27	3,000

● HTSSOP

Pin	Sym-bol	Package	Actual Size	Dimensions (mm)				Quantity/ Reel (pcs)
				Body	Mount Area	Thickness	Pitch	
24	VP1	HTSSOP24-P1	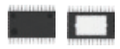	7.8 × 4.4	7.8 × 6.4	0.85	0.65	2,500

● MSOP(TVSP)

Pin	Sym-bol	Package	Actual Size	Dimensions (mm)				Quantity/ Reel (pcs)
				Body	Mount Area	Thickness	Pitch	
8	RB1	MSOP8(TVSP8)		2.9 × 2.8	2.9 × 4.0	0.9	0.65	2,000
10	RB2	MSOP10(TVSP10)		2.9 × 2.8	2.9 × 4.0	0.9	0.5	2,000

● MSOP(VSP)

Pin	Sym-bol	Package	Actual Size	Dimensions (mm)				Quantity/ Reel (pcs)
				Body	Mount Area	Thickness	Pitch	
8	R	MSOP8(VSP8)		2.9 × 2.8	2.9 × 4.0	1.1	0.65	2,000
10	R	MSOP10(VSP10)		2.9 × 2.8	2.9 × 4.0	1.1	0.5	2,000

(Note) MSOP(TVSP) : MEET JEDEC MO-187-DA THIN TYPE, MSOP(VSP) : MEET JEDEC MO-187-DA

● QFN

Pin	Sym-bol	Package	Actual Size	Dimensions (mm)				Quantity/ Reel (pcs)
				Body	Mount Area	Thickness *1	Pitch	
24	K	QFN0404-24		4.0 × 4.0	4.0 × 4.0	0.8	0.5	1,000
24	L	QFN0404-24B		4.0 × 4.0	4.0 × 4.0	0.75	0.5	1,000
31	**L**	**QFN0505-31**		5.0 × 5.0	5.0 × 5.0	0.85	0.5	1,000
32	L	QFN0505-32B		5.0 × 5.0	5.0 × 5.0	0.85	0.5	1,000
32	L	QFN0505-32-P7		5.0 × 5.0	5.0 × 5.0	0.75	0.5	1,000
48	L	QFN0707-48-P27	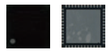	7.0 × 7.0	7.0 × 7.0	0.9	0.5	2,000
56	L	QFN0808-56	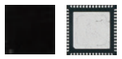	8.0 × 8.0	8.0 × 8.0	0.8	0.5	1,040
26	NC	QFN3426-26-NC		3.4 × 2.6	3.4 × 2.6	0.75	0.4	1,500

*1 Maximum Value

● SOT

Pin	Sym-bol	Package	Actual Size	Dimensions (mm)				Quantity/ Reel (pcs)
				Body	Mount Area	Thickness	Pitch	
5	DC	SOT-23-5-DC		2.9 × 1.6	2.9 × 2.8	1.1	0.95	3,000
5	F	SOT-23-5		2.9 × 1.6	2.9 × 2.8	1.1	0.95	3,000
5	N	SOT-23-5		2.9 × 1.6	2.9 × 2.8	1.1	0.95	3,000
6	F1	SOT-23-6-1		2.9 × 1.6	2.9 × 2.8	1.1	0.95	3,000
6	N	SOT-23-6		2.9 × 1.6	2.9 × 2.8	1.1	0.95	3,000
6	N	SOT-23-6W		2.9 × 1.8	2.9 × 2.8	1.1	0.95	3,000
3	U3	SOT-89-3		4.5 × 2.5	4.5 × 4.25	1.5	1.5	1,000
5	DF	SOT-89-5-DF		4.5 × 2.5	4.5 × 4.5	1.5	1.5	1,000
5	H	SOT-89-5		4.5 × 2.5	4.5 × 4.35	1.5	1.5	1,000
5	U2	SOT-89-5-2		4.5 × 2.5	4.5 × 4.5	1.5	1.5	1,000

● SOP JEDEC(EMP)

Pin	Sym-bol	Package	Actual Size	Dimensions (mm)				Quantity/ Reel (pcs)
				Body	Mount Area	Thickness	Pitch	
8	E	SOP8 JEDEC 150mil(EMP8)		5.0 × 3.9	5.0 × 6.0	1.5	1.27	2,000

● SSOP

Pin	Sym-bol	Package	Actual Size	Dimensions (mm)				Quantity/ Reel (pcs)
				Body	Mount Area	Thickness	Pitch	
8	G	SSOP-8G		2.9 × 2.8	2.9 × 4.0	1.1	0.65	3,000
10	V	SSOP-10		3.1 × 4.4	3.1 × 6.4	1.15	0.5	2,000
8	V	SSOP8		3.5 × 4.4	3.5 × 6.4	1.15	0.65	2,000
14	V	SSOP14		5.0 × 4.4	5.0 × 6.4	1.15	0.65	2,000
16	BD	SSOP-16-BD		5.0 × 4.4	5.0 × 6.4	1.15	0.65	2,000
16	V	SSOP16		5.0 × 4.4	5.0 × 6.4	1.15	0.65	2,000
20	VC3	SSOP20-C3		6.5 × 4.4	6.5 × 6.4	1.15	0.65	2,000
32	V	SSOP32		11.0 × 5.6	11.0 × 7.6	1.15	0.65	2,000

● TO

Pin	Sym-bol	Package	Actual Size	Dimensions (mm)				Quantity/ Reel (pcs)
				Body	Mount Area	Thickness	Pitch	
5	DL3	TO-252-5-L3	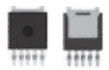	6.54 × 6.04	6.54 × 9.68	2.29	1.27	3,000
5	DL5	TO-252-5-L5	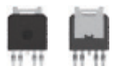	6.54 × 6.04	6.54 × 9.68	2.29	1.14	3,000
5	J	TO-252-5-P2	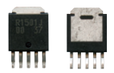	6.6 × 6.1	6.6 × 9.9	2.3	1.27	3,000

Nisshinbo Micro Devices Assists Electrification of Vehicles with Power Management IC

··· Functional Safety ···

Implementation of Safety Mechanisms

Implementation of safety mechanisms with Nisshinbo Micro Devices power management IC

We enhance safety and reliability of automobiles by offering products that can be useful for constructing safety mechanisms of customers' systems, such as window type voltage detectors (reset ICs) and system power management ICs with watchdog timer function.

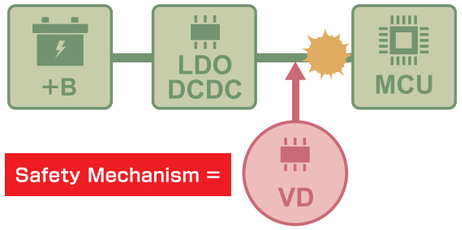

Functional Safety for CMOS Image Sensor PMIC

Under Development

RN5T5611 Series

Provide ISO26262 ASIL-D with functional safety

Client's Concerns

In the development of systems that require ASIL, it takes a lot of time to investigate the failure mode coverage of all components according to the LEVEL and to measure the safety mechanism.

Nisshinbo Micro Devices' solutions

We are preparing a product according to the development process conforming to ISO26262. This product is equipped with safety mechanisms that guarantee fault detection rate capable for ASIL. Therefore this makes no additional parts required and contributes to reducing man-hours and system area.

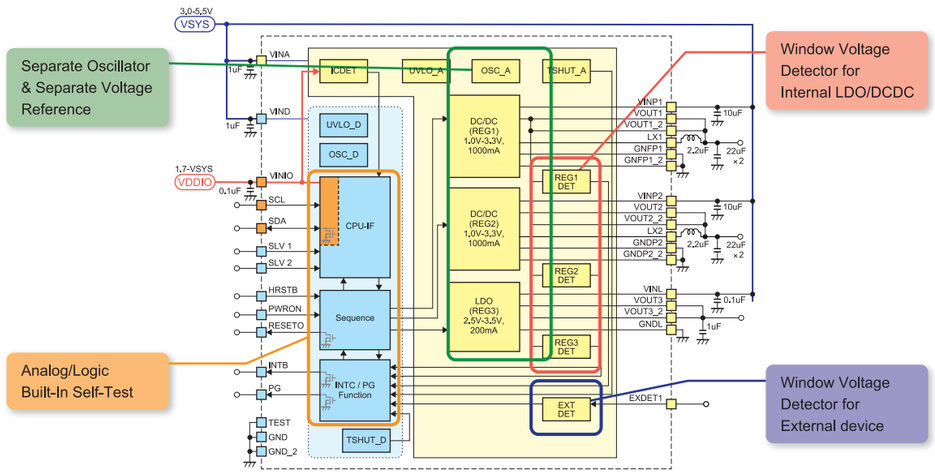

High performance excitation amplifier for automotive resolvers

Mass Production | AEC-Q100 to be Compliant

Part No. **NJU7870VB3／NJU77903DL3**

Features

Optimal excitation amplifier for resolver system

Significant reduction in design time and mounting area by integrating excitation circuits

Key Specifications

NJU7870VB3

- Differential voltage input and differential current Output
- *Transconductance 13.5mAp/Vpp typ.
- Operating Voltage 2.4V to 5.5V
- Operating Temperature -40 to 125℃
- Built-in thermal shutdown circuit
- Built-in external control shutdown function
- Equipped with 2 excitation circuit
- *Can be combined with various resolver methods such as 1-phase excitation and 2-phase excitation

NJU77903DL3

- Rail-to-Rail Input / Output Operational Amplifier
- High output current ±100mA typ. (200mAPP typ.)
- Operating Voltage 6.8V to 36V
- Operating Temperature -40 to 125℃
- Built-in thermal shutdown circuit
- Built-in current limit
- Both current control and voltage control modes are available.

Applications

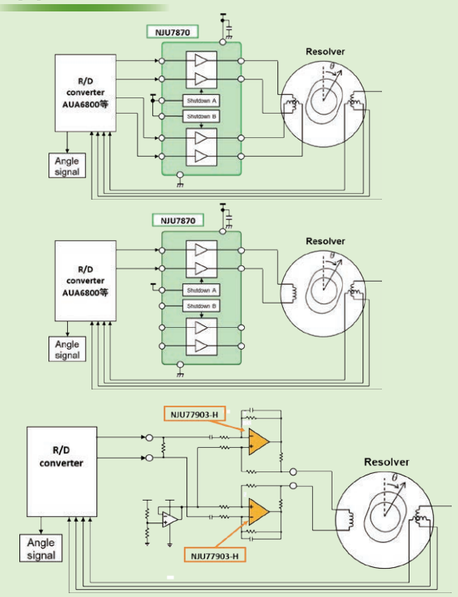

	NJU7870VB3	NJU77903DL3		Discrete	
Excitation amplifier	 SSOP16 5.0×6.4×1.2(mm)	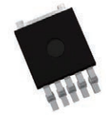 TO-252-5L 5.2×6.2×1.45(mm)		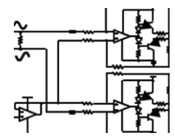	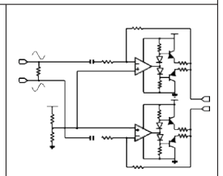
Control Mode	Current control Item points 3 (NJU7870×1pcs)	Current control Item points 17 (NJU77903×2pcs)	Voltage control Item points 9 (NJU77903×2pcs)	Current control Item points 33	Voltage control Item points 25
Mounting area	90% down (vs, discrete)	40% down (vs, discrete)		–	
Output current	30mA	100mA		–	

MEMO

Nisshinbo Micro Devices Companies (JAPAN)

Head Office
NB Nihonbashi Bldg., 3-10 Nihonbashi Yokoyama-cho,Chuo-ku, Tokyo 103-8456, Japan
TEL:+81-3-5642-8222 FAX:+81-3-5642-8220

Nagoya Sales office
8th Floor, NUP-Fushimi Bldg., 2-2-12 Sakae, Naka-ku, Nagoya City, Aichi 460-0008, Japan
TEL:+81-52-217-8800 FAX:+81-52-222-0708

Ikeda Office
13-1 Himemuro-cho, Ikeda-shi, Osaka 563-8501 Japan
TEL:+81-72-748-6266

Fukuoka Sales office
Rm 1003, 10th Floor, Asako Hakata Bldg., 1-11-5 Hakataeki-higashi, Hakata-ku, Fukuoka City, Fukuoka 812-0013, Japan
TEL:+81-92-433-5815 FAX:+81-92-433-5816

Nagasaki Technical Center
Miuracho Alpha bldg., NO.302,2-1,Miura-cho,Sasebo City,Nagasaki 857-0863, Japan
TEL:+81-956-23-0555 FAX:+81-956-23-0554

Kawagoe Plant
2-1-1 Fukuoka, Fujimino, Saitama 356-8510, Japan
TEL:+81-49-264-2111 FAX:+81-49-264-4241

Yashiro Plant
30-1, Saho, Kato-shi, Hyogo 673-1447, Japan
TEL:+81-795-42-6111

Nisshinbo Micro Devices Fukuoka Co., Ltd.
1-1-2, Imajuku-higashi, Nishi-ku, Fukuoka City, Fukuoka 819-0161, Japan
TEL:+81-92-805-4660 FAX:+81-92-805-4669

Nisshinbo Micro Devices AT Co., Ltd.
950 Tateno, Yoshinogari-cho, Kanzaki-gun, Saga 842-0032, Japan
TEL:+81-952-52-3181 FAX:+81-952-52-3214

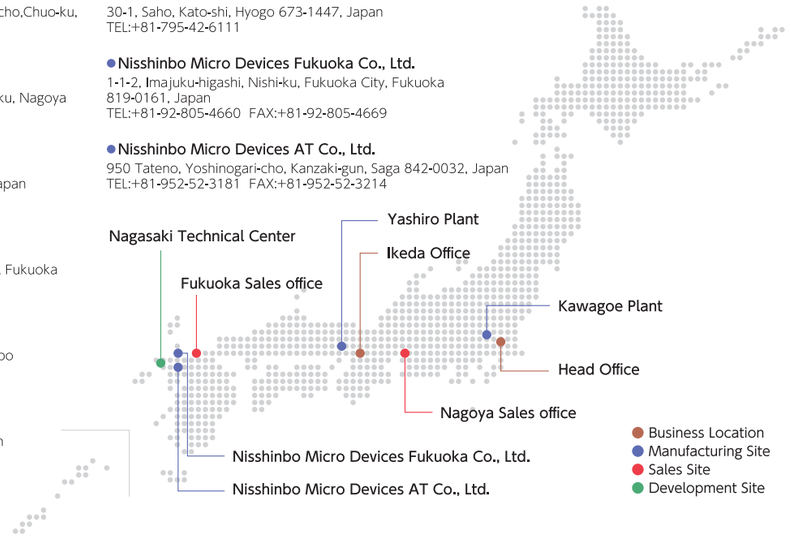

Nisshinbo Micro Devices Companies (GLOBAL)

Nisshinbo Micro Devices Americas Inc.
2107 North First Street, Suite 520, San Jose, CA 95131, U.S.A.
TEL:+1-408-320-2873(Main) FAX:+1-408-320-2874

Nisshinbo Micro Devices Europe GmbH
Theodor-Heuss-Allee 112, 60486 Frankfurt am Main, Germany
TEL:+49-69-6677-41-360 FAX:+49-69-6677-41-364

Nisshinbo Micro Devices (Thailand) Co., Ltd.
88 Mu 13, Tambol Makhuajae, Amphur Muang, Lamphun 51000 Thailand
TEL:+66-53-581-260(Main) FAX:+66-53-581-266

Nisshinbo Micro Devices Singapore Pte Ltd.
#07-01 Automobile Megamart, 61 Ubi Avenue 2, Singapore 408898
TEL:+65-6744-4143(Main) FAX:+65-6744-9439

Nisshinbo Micro Devices Korea Co., Ltd.
3F, Seongji building, 5, Bangbaecheon-ro 2-gil, Seocho-gu, Seoul, 06693,Republic of Korea
TEL:+82-2-2135-5700 FAX:+82-2-2051-5713

NJR SHANGHAI Co., Ltd. Shanghai Office
Room H, 23rd Floor, Huadu Bldg., No.838 Zhang Yang Road, Pu Dong New District, Shanghai, P.R. China
TEL:+86-21-5820-2567 FAX:+86-21-5831-0737

NJR SHANGHAI Co., Ltd. Shenzhen Office
Room 3016, Tower A Century Holiday Plaza, Ruisi Center, No.9030, Shennan Road, Nanshan District, Shenzhen, P.R. China
TEL:+86-755-8693-2209 FAX:+86-755-8693-2210

Nisshinbo Shanghai Semiconductor Technology Inc.
Room 403, No.2 Building, 690#Bi Bo Road. Zhangjiang Hi-Tech Park, Shanghai 201203, People's Republic of China
TEL:+86-21-5027-3200 FAX:+86-21-5027-3299

Nisshinbo Shanghai Semiconductor Technology Inc. Shenzhen Branch
33F Room06-07 Shunhing Square Diwang commercial center,5002 Shennan Dong Road, Shenzhen, PRC

Nisshinbo Micro Devices Inc. Taipei Office
8F-7, Lane 211, Civic Blvd. Sec. 1, Datong District, Taipei City 103, Taiwan
TEL:+886-2-2552-6778 FAX:+886-2-2552-6800