WIFI 7 AP Router

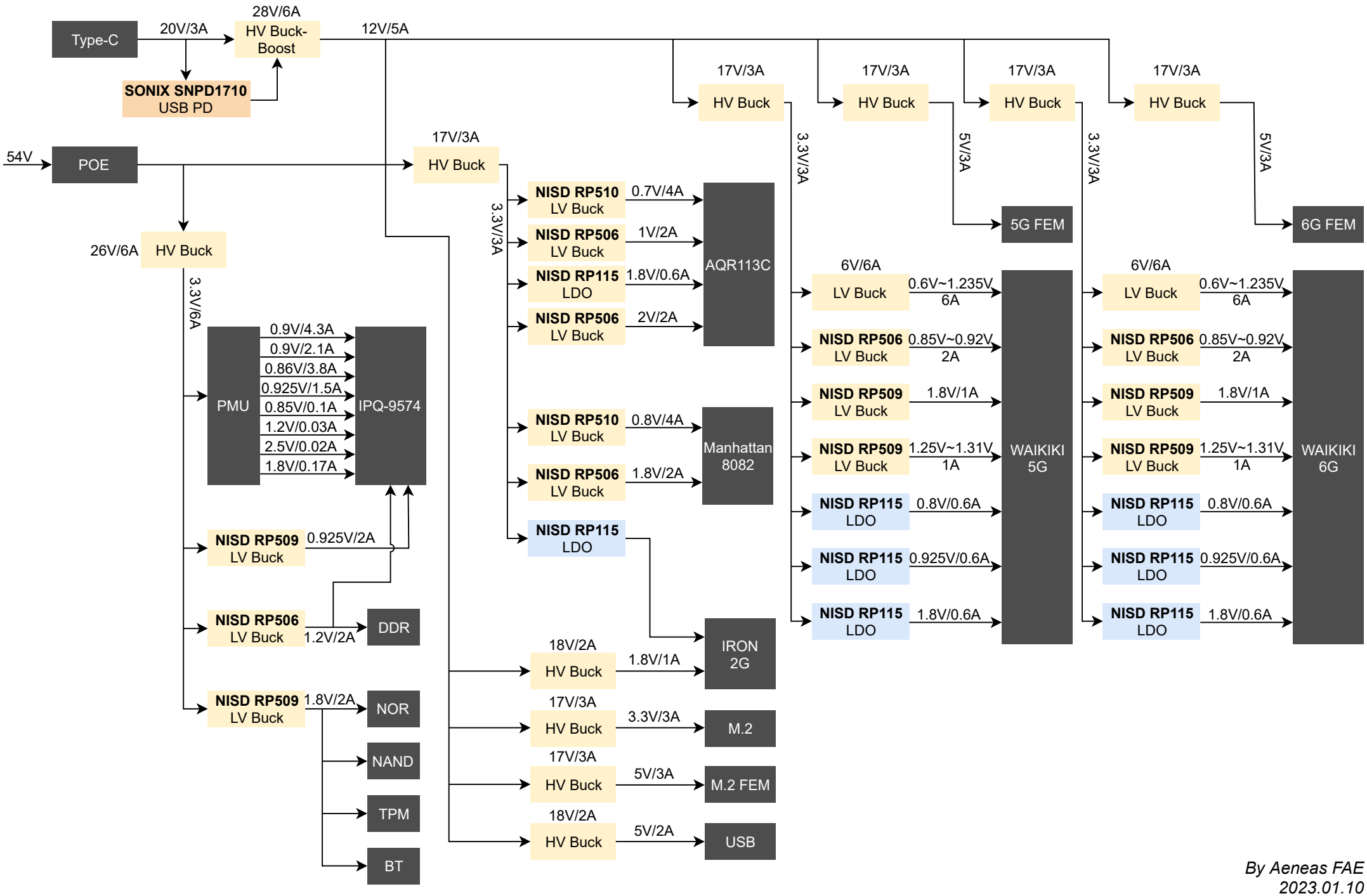

By Aeneas FAE
2023.01.10